LOT 1
IN OR 1353/1642
PARKVIEW PB 6/390

KLAUDER JAMES R & PENKA V
811 PARKVIEW PL W
FERNANDINA BEACH, FL 32034

2025

00-00-31-163V-0001-0000

NASSAU COUNTY PROPERTY

BUILDING CHARACTERISTICS

ELEMENT	CD	CONSTRUCTION
Exterior Wall	16	WD FR STUC 100
Roof Structur	08	IRREGULAR 100
Roof Cover	03	COMP SHNGL 100
Interior Wall	05	DRYWALL 100
Interior Floo	12	HARDWOOD 70
Interior Floo	11	CLAY TILE 30
Air Condition	03	CENTRAL 100
Heating Type	04	AIR DUCTED 100
Bedrooms		4 100
Bathrooms		3 100
Frame	02	WOOD FRAME 100
Stories	1.5	1.5 100
Units		0 100
Occupancy	00	NONE 100
Quality	03	Quality Level 03
DOR CODE	0100	SINGLE FAMILY
MAP NUM		MKT AREA 01
NEIGHBORHOOD/LOC	1027.00	

AREA TYPE	TOTAL GROSS AREA	PCT OF BASE	YEAR	TOT ADJ AREA	SUBAREA MARKET VALUE
BAS	1,773	100	2004	1,773	241,430
FGR	463	55	2004	255	34,724
FOP	40	30	2004	12	1,634
FSP	168	40	2004	67	9,123
FUS	449	100	2004	449	61,141
TOTALS	2,893			2,556	348,051

MARKET ADJUSTMENTS

TYPE	MDL	EFF. AREA	TOT ADJ PTS	EFF. BASE RATE	REPL. COST NEW	AYB	EYB	ECON	FNCT		NORM	% COND
0900	01	2,556	114.6240	151.30	386,723	2004	2004	0	0	0	10.00	90.00

1 SNGL FAM – 100% - 2006 Heated Area: 2222 HX Base Yr 2006

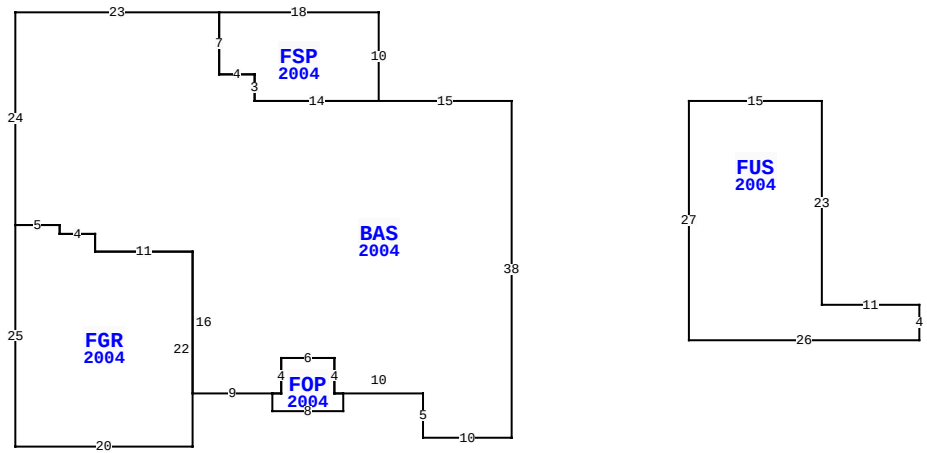

BLD DATE		LGL DATE	
XF DATE		LAND DATE	05/13/2025 MLU
INC DATE		AG DATE	

811 W PARKVIEW PL, FERNANDINA BEACH

VALUATION SUMMARY

VALUATION BY		STANDARD
Tax Group: 2	Tax Dist:	
BUILDING MARKET VALUE		348,051
TOTAL MARKET OB/XF VALUE		5,108
TOTAL LAND VALUE - MARKET		200,000
TOTAL MARKET VALUE		553,159
SOH/AGL Deduction		326,830
ASSESSED VALUE		226,329
TOTAL EXEMPTION VALUE	HX HB VX	55,722
BASE TAXABLE VALUE		170,607
TOTAL JUST VALUE		553,159
NCON VALUE		0
INCOME VALUE		
PREVIOUS YEAR MKT VALUE		486,611

PERMIT NUM	DESCRIPTION	AMT	ISSUED
20040350	NEW CONSTR	148,000	02/26/2004

SALES DATA

OFF RECORD Number	DATE	TYPE INST	Q U	V I	RSN CD	SALE PRICE
1353/1642	9/28/2005	WD	Q	I		379,900
GRANTOR: OLIN MARK R & JANET E						
GRANTEE: KLAUDER JAMES R & P						
1255/1894	8/30/2004	WD	Q	I		278,600
GRANTOR: JAMES R HANNAH INC						
GRANTEE: OLIN MARK R & JANET						

BUILDING NOTES

BUILDING DIMENSIONS

BAS=[YR=2004] W15 FSP=[YR=2004] N10 W18 S7 E4 S3 E14$ W14 N3 W4 N7 W23 S24 FGR=[YR=2004] S25 E20 N22 W11 N2 W4 N1 W5$ E5 S1 E4 S2 E11 S16 E9 FOP=[YR=2004] S2 E8 N2 W1 N4 W6 S4 W1$ E1 N4 E6 S4 E10 S5 E10 N38$ PTR=E20 FUS=[YR=2004] E15 S23 E11 S4 W26 N27$ W20$.

EXTRA FEATURES

LN	OB/XF CODE	DESCRIPTION	BLD	CAP	L	W	UNITS	UT	Adj R	ADJ UNIT PRICE	ORIG COND	YEAR ON	YEAR ACTUAL	Q	% COND	OB/XF MKT VALUE	NOTES
1	0877	JACUZZI	0	100	0	0	1.00	UT	1,000.00	1,000.00	100	2004	2004	3	21	210	
2	0810	CONCRETE A	0	100	10	18	180.00	SF	6.50	6.50	100	2004	2004	3	83	971	
3	0810	CONCRETE A	0	100	6	4	24.00	SF	6.50	6.50	100	2004	2004	3	83	129	
4	0810	CONCRETE A	0	100	20	4	80.00	SF	6.50	6.50	100	2004	2004	3	83	432	
5	0810	CONCRETE A	0	100	39	16	624.00	SF	6.50	6.50	100	2004	2004	3	83	3,366	

LAND DESCRIPTION

TOTAL OB/XF 5,108

LN	USE CODE	CLS	LAND USE DESCRIPTION	CAP	RD	LOC ZONE	FRONT	DEPTH	TOT LND UTS	UNIT TYPE	DT	DPTH FACT	% COND	TOT ADJ	UNIT PRICE	ADJ UNIT PRICE	LAND VALUE	OTHER ADJUSTMENTS AND NOTES	YEAR	DENSITY	DECL	FRZ	YR	CONSRV
1	000100	C	RES	100	0003	R-1	80.00	100.00	1.00	LT		1.00	1.00	1.00	200,000.00	200,000.00	200,000							

REVIEW DATE 05/12/2019 BY KBA Total Acres: 0.00 Total Land Value: 200,000 Market: 0 Agricultural: 0 Common: 200,000 PRINTED 07/30/2025 BY SYS