LOT 9
IN OR 1911/916
PARKWAY NORTH PB 5/263

LAURENT MARIA SOCORRO
4419 TITLEIST DRIVE
FERNANDINA BEACH, FL 32034

2025

00-00-31-163N-0009-0000

BUILDING CHARACTERISTICS

ELEMENT	CD	CONSTRUCTION
Exterior Wall	16	WD FR STUC 100
Roof Structur	08	IRREGULAR 100
Roof Cover	03	COMP SHNGL 100
Interior Wall	05	DRYWALL 100
Interior Floo	14	CARPET 70
Interior Floo	11	CLAY TILE 30
Air Condition	03	CENTRAL 100
Heating Type	04	AIR DUCTED 100
Bedrooms		4 100
Bathrooms		3 100
Frame	02	WOOD FRAME 100
Stories	2.	2. 100
Units		0 100
Occupancy	00	NONE 100
Quality	05	Quality Level 05

DOR CODE 0100 SINGLE FAMILY
MAP NUM | MKT AREA 01
NEIGHBORHOOD/LOC 1072.00

AREA TYPE	TOTAL GROSS AREA	PCT OF BASE	YEAR	TOT ADJ AREA	SUBAREA MARKET VALUE
BAS	1,709	100	2002	1,709	279,440
FGR	625	55	2002	344	56,248
FOP	70	30	2002	21	3,434
FOP	298	30	2002	89	14,552
FSP	496	40	2006	198	32,376
FUS	742	100	2002	742	121,325
PTO	20	5	2002	1	164
TOTALS	3,960			3,104	507,538

MARKET ADJUSTMENTS

TYPE	MDL	EFF. AREA	TOT ADJ PTS	EFF. BASE RATE	REPL. COST NEW	AYB	EYB	ECON	FNCT		NORM	% COND
0500	01	3,104	116.2788	183.72	570,267	2002	2002	0	0	0	11.00	89.00

1 SFR CUST – 100% - 2003 Heated Area: 2451 HX Base Yr 2003

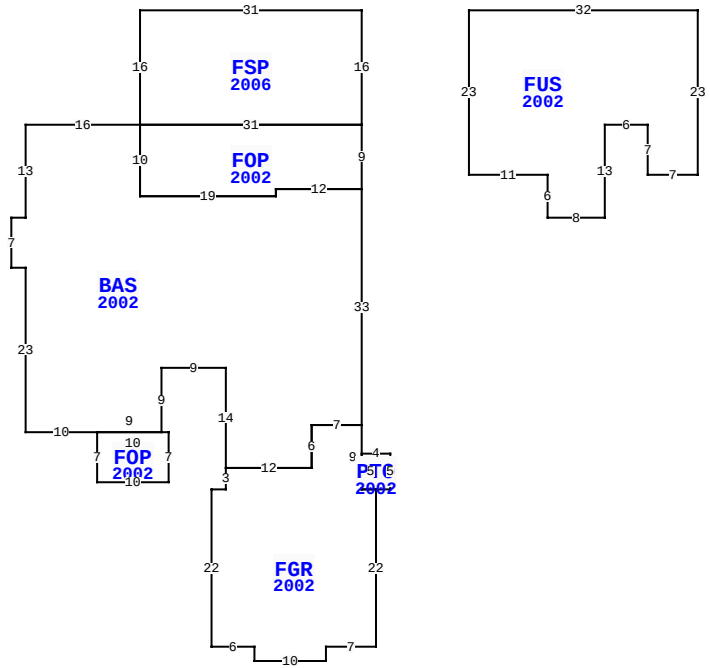

4419 TITLEIST DR, FERNANDINA BEACH

BLD DATE		LGL DATE	
XF DATE		LAND DATE	
INC DATE		AG DATE	

NASSAU COUNTY PROPERTY

PAGE 1 of 1 2

VALUATION SUMMARY

VALUATION BY		STANDARD
Tax Group: 2	Tax Dist:	
BUILDING MARKET VALUE		507,538
TOTAL MARKET OB/XF VALUE		7,552
TOTAL LAND VALUE - MARKET		210,000
TOTAL MARKET VALUE		725,090
SOH/AGL Deduction		381,595
ASSESSED VALUE		343,495
TOTAL EXEMPTION VALUE	HX HB VX WX	60,722
BASE TAXABLE VALUE		282,773
TOTAL JUST VALUE		725,090
NCON VALUE		0
INCOME VALUE		
PREVIOUS YEAR MKT VALUE		702,308

PERMIT NUM	DESCRIPTION	AMT	ISSUED
20121561	HVAC	20,670	08/01/2012
20053208	REMODEL	1,000	12/19/2005
20052951	XFOB	30,000	11/02/2005
B032626	ADDITION	4,000	03/05/2003
B012612	NEW CONSTR	200,000	12/11/2001

SALES DATA

OFF RECORD Number	DATE	TYPE INST	Q / U	V / I	RSN CD	SALE PRICE
1911/0916	3/20/2014	QC	U	I	11	100
GRANTOR: LAURENT MICHAEL J & M						
GRANTEE: LAURENT MICHAEL J &						
1908/0630	3/20/2014	QC	U	I	11	111,300
GRANTOR: LAURENT MICHAEL J & M						
GRANTEE: LAURENT MICHAEL J &						

BUILDING NOTES

BUILDING DIMENSIONS

FSP=[YR=2006] W31 S16 BAS=[YR=2002] W16 S13 W2 S7 E2 S23
E10 FOP=[YR=2002] S7 E10 N7 W10 $ E9 N9 E9 S14 FGR=[YR=2002]
S3 W2 S22 E6 S2 E10 N2 E7 N22 PTO=[YR=2002] E2 N5 W4 S5 E2 $
W2 N9 W7 S6 W12 $ E12 N6 E7 N33 W12 S1 W19 N10 $
FOP=[YR=2002] S10 E19 N1 E12 N9 W31 $ E31 N16 $ PTR=E15
FUS=[YR=2002] E32 S23 W7N7 W6 S13 W8 N6 W11 N23$ W15$.

EXTRA FEATURES

LN	OB/XF CODE	DESCRIPTION	BLD	CAP	L	W	UNITS	UT	Adj R	ADJ UNIT PRICE	ORIG COND	YEAR ON	YEAR ACTUAL	Q	% COND	OB/XF MKT VALUE	NOTES
1	0812	CONCRETE C	0	100	0	0	1,785.00	SF	4.00	4.00	100	2002	2002	3	80	5,712	
2	0810	CONCRETE A	0	100	0	0	137.00	SF	6.50	6.50	100	2002	2002	3	80	712	
3	1076	TRELLIS A	0	100	16	9	144.00	SF	7.50	7.50	100	2003	2003	3	29	313	
4	0855	CONC PAVER	0	100	0	0	128.00	SF	7.00	7.00	100	2011	2011	3	91	815	

LAND DESCRIPTION

TOTAL OB/XF 7,552

LN	USE CODE	CLS	LAND USE DESCRIPTION	CAP	RD	LOC ZONE	FRONT	DEPTH	TOT LND UTS	UNIT TYPE	DT	DPTH FACT	% COND	TOT ADJ	UNIT PRICE	ADJ UNIT PRICE	LAND VALUE	OTHER ADJUSTMENTS AND NOTES	YEAR	DENSITY	DECL	FRZ	YR	CONSRV
1	000140	C	RES GOLF	100		R1-G	0.00	0.00	1.00	UT		1.00	1.00	1.05	200,000.00	210,000.00	210,000							

REVIEW DATE 05/12/2019 BY KBA Total Acres: 0.00 Total Land Value: 210,000 Market: 0 Agricultural: 0 Common: 210,000 PRINTED 07/30/2025 BY SYS