LOT 4
PARKWAY NORTH PB 5/263

WINTHROP LEWIS GST EXEMPT TRST/BORGHESE FRANCESCO
C/O WINTHROP H LEWIS, 4435 TITELIST DR
FERNANDINA BEACH, FL 32034

2025

00-00-31-163N-0004-0000

NASSAU COUNTY PROPERTY

BUILDING CHARACTERISTICS

ELEMENT	CD	CONSTRUCTION
Exterior Wall	16	WD FR STUC 100
Roof Structur	03	GABLE/HIP 100
Roof Cover	03	COMP SHNGL 100
Interior Wall	05	DRYWALL 90
Interior Wall	08	DECORATIVE 10
Interior Floo	14	CARPET 80
Interior Floo	11	CLAY TILE 20
Air Condition	03	CENTRAL 100
Heating Type	04	AIR DUCTED 100
Bedrooms		3 100
Bathrooms		2 100
Frame	02	WOOD FRAME 100
Stories	2.	2. 100
Units		0 100
Occupancy	00	NONE 100
Quality	05	Quality Level 05
DOR CODE	0100	SINGLE FAMILY
MAP NUM		MKT AREA 01
NEIGHBORHOOD/LOC	1072.00	

AREA TYPE	TOTAL GROSS AREA	PCT OF BASE	YEAR	TOT ADJ AREA	SUBAREA MARKET VALUE
BAS	1,836	100	1996	1,836	305,232
FGR	598	55	1996	329	54,695
FOP	84	30	1996	25	4,157
FOP	189	30	1996	57	9,476
FUS	320	100	1996	320	53,200
PTO	84	5	1996	4	665
TOTALS	3,111			2,571	427,425

MARKET ADJUSTMENTS

TYPE	MDL	EFF. AREA	TOT ADJ PTS	EFF. BASE RATE	REPL. COST NEW	AYB	EYB	ECON	FNCT		NORM	% COND
0500	01	2,571	116.2656	183.70	472,293	1996	2005	0	0	0	9.50	90.50

1 SFR CUST – 100% - 2020 Heated Area: 2156 HX Base Yr 2020

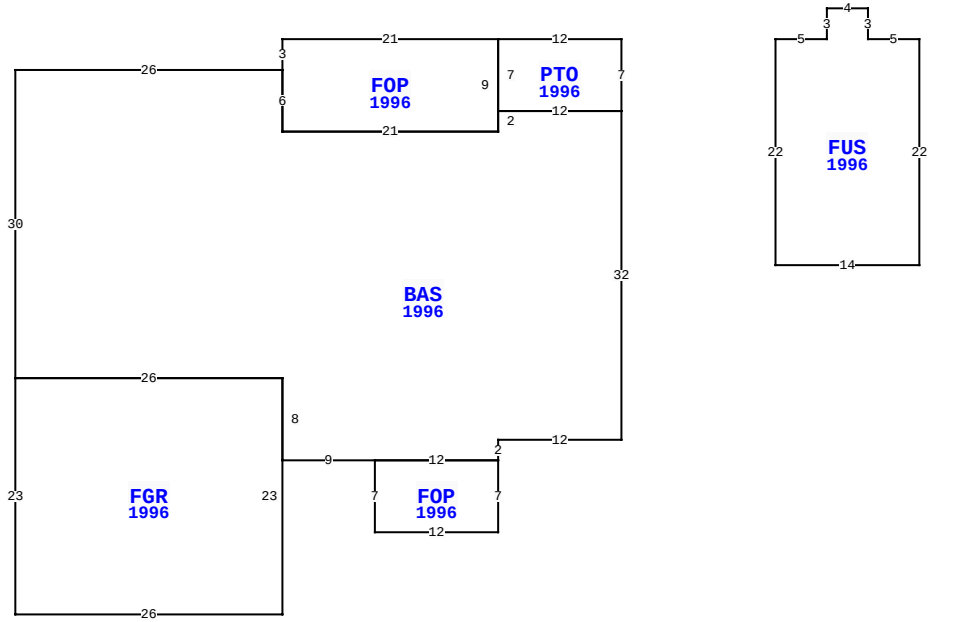

4435 TITLEIST DR, FERNANDINA BEACH

BLD DATE		LGL DATE	
XF DATE		LAND DATE	
INC DATE		AG DATE	

VALUATION SUMMARY

VALUATION BY		STANDARD
Tax Group: 2	Tax Dist:	
BUILDING MARKET VALUE		427,425
TOTAL MARKET OB/XF VALUE		9,065
TOTAL LAND VALUE - MARKET		220,000
TOTAL MARKET VALUE		656,490
SOH/AGL Deduction		228,245
ASSESSED VALUE		428,245
TOTAL EXEMPTION VALUE	HX HB	50,722
BASE TAXABLE VALUE		377,523
TOTAL JUST VALUE		656,490
NCON VALUE		0
INCOME VALUE		
PREVIOUS YEAR MKT VALUE		637,409

PERMIT NUM	DESCRIPTION	AMT	ISSUED
B959235	NEW CONSTR	98,245	08/08/1995

SALES DATA

OFF RECORD Number	DATE	TYPE INST	Q U	V I	RSN CD	SALE PRICE
2325/1750	10/18/2019	PR	U	I	19	100
GRANTOR: BAKER ELSIE ESTATE						
GRANTEE: WINTHROP LEWIS GST						
2138/0541	8/04/2017	WD	Q	I	02	430,000
GRANTOR: BRINK NANCY						
GRANTEE: BAKER ELSIE						

BUILDING NOTES

BUILDING DIMENSIONS

PTO=[YR=1996] W12 FOP=[YR=1996] W21 S3 BAS=[YR=1996] W26 S30 FGR=[YR=1996] S23 E26 N23 W26 $ E26 S8 E9 FOP=[YR=1996] S7 E12 N7 W12 $ E12 N2 E12 N32 W12 S2 W21 N6 $ S6 E21 N9 $ S7 E12 N7 $ PTR=E15 FUS=[YR=1996] E5 N3 E4 S3 E5 S22W14 N22 $ W15 $.

EXTRA FEATURES

LN	OB/XF CODE	DESCRIPTION	BLD	CAP	L	W	UNITS	UT	Adj R	ADJ UNIT PRICE	ORIG COND	YEAR ON	YEAR ACTUAL	Q	% COND	OB/XF MKT VALUE	NOTES
1	0504	FP-ELECTRI	0	100	0	0	1.00	UT	2,000.00	2,000.00	100	1996	1996	3	77	1,540	
2	0811	CONCRETE B	0	100	0	0	1,235.00	SF	5.20	5.20	100	1996	1996	3	70	4,495	
3	0810	CONCRETE A	0	100	0	0	178.00	SF	6.50	6.50	100	1996	1996	3	70	810	
4	0755	FSP	0	100	21	8	168.00	SF	20.00	20.00	100	2006	2006	3	24	806	
5	0810	CONCRETE A	0	100	0	0	16.00	SF	6.50	6.50	100	2006	2006	3	86	89	
6	0471	VINYL FNC	0	100	0	0	9.00	LF	32.00	32.00	100	2006	2006	3	66	190	
7	0855	CONC PAVER	0	100	0	0	132.00	SF	10.00	10.00	100	2006	2006	3	86	1,135	

LAND DESCRIPTION

TOTAL OB/XF 9,065

LN	USE CODE	CLS	LAND USE DESCRIPTION	CAP	RD	LOC ZONE	FRONT	DEPTH	TOT LND UTS	UNIT TYPE	DT	DPTH FACT	% COND	TOT ADJ	UNIT PRICE	ADJ UNIT PRICE	LAND VALUE	OTHER ADJUSTMENTS AND NOTES	YEAR	DENSITY	DECL	FRZ	YR	CONSRV
1	000140	C	RES GOLF	100		R1-G	0.00	0.00	1.00	UT		1.00	1.00	1.10	200,000.00	220,000.00	220,000							

REVIEW DATE 05/12/2019 BY KBA Total Acres: 0.00 Total Land Value: 220,000 Market: 0 Agricultural: 0 Common: 220,000 PRINTED 07/30/2025 BY SYS