LOT 3
IN OR 977/1562
PARKWAY NORTH PB 5/263

DONOVAN PAUL F
4439 TITLEIST DR
FERNANDINA BEACH, FL 32034

2025

00-00-31-163N-0003-0000

BUILDING CHARACTERISTICS

ELEMENT	CD	CONSTRUCTION
Exterior Wall	16	WD FR STUC 100
Roof Structur	03	GABLE/HIP 100
Roof Cover	03	COMP SHNGL 100
Interior Wall	05	DRYWALL 100
Interior Floo	13	LVT/LAMNT 70
Interior Floo	11	CLAY TILE 30
Air Condition	03	CENTRAL 100
Heating Type	04	AIR DUCTED 100
Bedrooms		3 100
Bathrooms		2 100
Frame	02	WOOD FRAME 100
Stories	1.	1. 100
Units		0 100
Occupancy	00	NONE 100
Quality	05	Quality Level 05
DOR CODE	0100	SINGLE FAMILY
MAP NUM		MKT AREA 01
NEIGHBORHOOD/LOC	1072.00	

AREA TYPE	TOTAL GROSS AREA	PCT OF BASE	YEAR	TOT ADJ AREA	SUBAREA MARKET VALUE
BAS	1,847	100	1997	1,847	308,315
FGR	484	55	1997	266	44,403
FOP	126	30	1997	38	6,343
FOP	168	30	1997	50	8,346
PTO	126	5	2002	6	1,002
TOTALS	2,751			2,207	368,410

MARKET ADJUSTMENTS

TYPE	MDL	EFF. AREA	TOT ADJ PTS	EFF. BASE RATE	REPL. COST NEW	AYB	EYB	ECON	FNCT		NORM	% COND
0500	01	2,207	122.1374	192.98	425,907	1997	1997	0	0	0	13.50	86.50

1 SFR CUST – 100% - 2002 Heated Area: 1847 HX Base Yr 2002

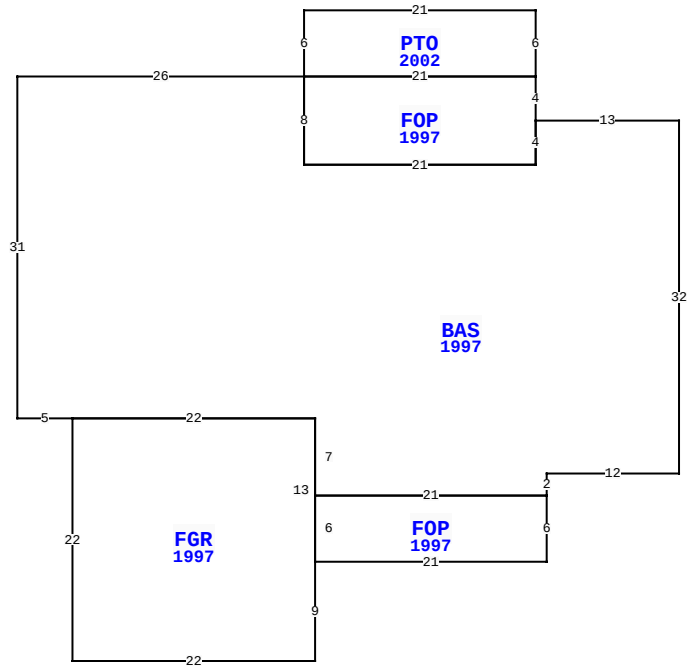

4439 TITLEIST DR, FERNANDINA BEACH

BLD DATE		LGL DATE	
XF DATE		LAND DATE	
INC DATE		AG DATE	

NASSAU COUNTY PROPERTY

PAGE 1 of 1 2

VALUATION SUMMARY

VALUATION BY		STANDARD
Tax Group: 2	Tax Dist:	
BUILDING MARKET VALUE		368,410
TOTAL MARKET OB/XF VALUE		8,785
TOTAL LAND VALUE - MARKET		200,000
TOTAL MARKET VALUE		577,195
SOH/AGL Deduction		294,184
ASSESSED VALUE		283,011
TOTAL EXEMPTION VALUE	HX HB WR	55,722
BASE TAXABLE VALUE		227,289
TOTAL JUST VALUE		577,195
NCON VALUE		0
INCOME VALUE		
PREVIOUS YEAR MKT VALUE		560,689

PERMIT NUM	DESCRIPTION	AMT	ISSUED
R1615144	ROOF	11,760	07/01/2016
20131401	FENCE	0	06/19/2013
20061004	H/AC	2,500	05/12/2006
B020778	ADDITION	3,000	05/06/2002
B9610070	NEW CONSTR	111,888	10/03/1996

SALES DATA

OFF RECORD Number	DATE	TYPE INST	Q / U	V / I	RSN CD	SALE PRICE
1687/1334	7/09/2010	QC	U	I	11	100
GRANTOR: DONOVAN PAUL F						
GRANTEE: DONOVAN PAUL F L/E						
0977/1562	3/27/2001	WD	Q	I		231,000
GRANTOR: WHITEFIELD JAMES CHAD						
GRANTEE: DONOVAN PAUL F & PA						

BUILDING NOTES

BUILDING DIMENSIONS

BAS=[YR=1997] W13 FOP=[YR=1997] N4 PTO=[YR=2002] N6 W21 S6 E21 $ W21 S8 E21 N4 $ S4 W21 N8 W26 S31 E5 FGR=[YR=1997] S22 E22 N9 FOP=[YR=1997] E21 N6 W21 S6 $ N13 W22 $ E22 S7 E21 N2 E12 N32 $.

EXTRA FEATURES

LN	OB/XF CODE	DESCRIPTION	BLD	CAP	L	W	UNITS	UT	Adj R	ADJ UNIT PRICE	ORIG COND	YEAR ON	YEAR ACTUAL	Q	% COND	OB/XF MKT VALUE	NOTES
1	0500	FP-PRE FAB	0	100	0	0	1.00	UT	3,500.00	3,500.00	100	1997	1997	3	79	2,765	
2	0812	CONCRETE C	0	100	0	0	1,254.00	SF	4.00	4.00	100	1997	1997	3	72	3,612	
3	0810	CONCRETE A	0	100	0	0	165.00	SF	6.50	6.50	100	1997	1997	3	72	772	
4	0911	SCRN RM A	0	100	0	0	126.00	SF	17.50	17.50	100	2002	2002	3	20	441	
5	0479	VF PICKET	0	100	0	0	144.00	LF	10.00	10.00	100	2013	2013	3	83	1,195	

LAND DESCRIPTION

TOTAL OB/XF 8,785

LN	USE CODE	CLS	LAND USE DESCRIPTION	CAP	RD	LOC ZONE	FRONT	DEPTH	TOT LND UTS	UNIT TYPE	DT	DPTH FACT	% COND	TOT ADJ	UNIT PRICE	ADJ UNIT PRICE	LAND VALUE	OTHER ADJUSTMENTS AND NOTES	YEAR	DENSITY	DECL	FRZ	YR	CONSRV
1	000140	C	RES GOLF	100		R1-G	0.00	0.00	1.00	UT		1.00	1.00	1.00	200,000.00	200,000.00	200,000							

REVIEW DATE 05/12/2019 BY KBA Total Acres: 0.00 Total Land Value: 200,000 Market: 0 Agricultural: 0 Common: 200,000 PRINTED 07/30/2025 BY SYS