LOT B
IN OR 1736/1458
THE PARK ADDITION PB 4/94

ROWAN THOMAS W III & SUSAN D T
1525 LISA AVENUE
FERNANDINA BEACH, FL 32034

2025

00-00-31-1630-000B-0000

BUILDING CHARACTERISTICS

ELEMENT	CD	CONSTRUCTION
Exterior Wall	10	ABOVE AVG 60
Exterior Wall	23	REINF CONC 40
Roof Structur	03	GABLE/HIP 100
Roof Cover	03	COMP SHNGL 100
Interior Wall	05	DRYWALL 100
Interior Floo	12	HARDWOOD 60
Interior Floo	11	CLAY TILE 40
Air Condition	03	CENTRAL 100
Heating Type	04	AIR DUCTED 100
Bedrooms		5 100
Bathrooms		4.5 100
Frame	04	REIN CONC 100
Stories	2.5	2.5 100
Units		0 100
BUD8 Adjustme	02	DIST FB 100
Occupancy	00	NONE 100
Quality	04	Quality Level 04
DOR CODE	0100	SINGLE FAMILY
MAP NUM		MKT AREA 01
NEIGHBORHOOD/LOC	1040.00	

AREA TYPE	TOTAL GROSS AREA	PCT OF BASE	YEAR	TOT ADJ AREA	SUBAREA MARKET VALUE
BAL	80	15	2010	12	1,532
BAL	903	15	2010	135	17,236
BAS	1,741	100	1993	1,741	222,274
DCK	80	10	2010	8	1,021
FOP	32	30	2010	10	1,277
FSP	240	40	1993	96	12,257
FST	802	55	1994	441	56,303
FUS	1,312	100	1993	1,312	167,504
PTO	36	5	2010	2	256
STR	88	10	2010	9	1,149
TOTALS	7,294			4,382	559,452

MARKET ADJUSTMENTS

TYPE	MDL	EFF. AREA	TOT ADJ PTS	EFF. BASE RATE	REPL. COST NEW	AYB	EYB	ECON	FNCT		NORM	% COND
0900	01	4,382	112.7280	148.80	652,042	1988	1995	0	0	0	14.20	85.80

1 SNGL FAM – 100% - 2012 Heated Area: 3053 HX Base Yr 2012

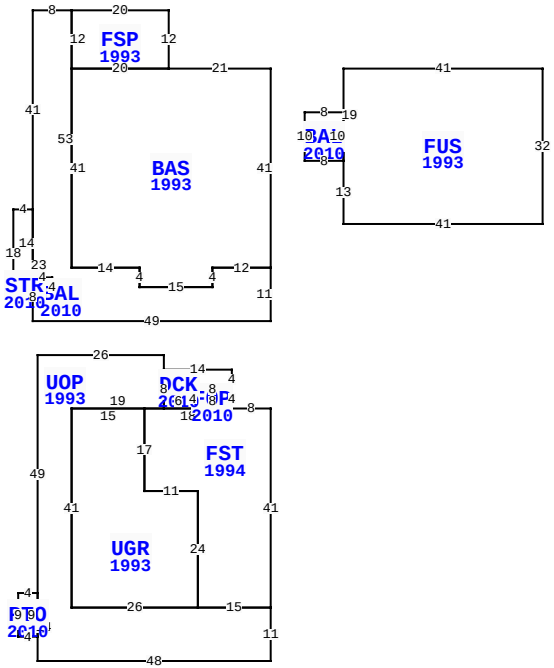

** This building has 12 Sub-Areas

1525 LISA AVE, FERNANDINA BEACH

BLD DATE		LGL DATE	
XF DATE		LAND DATE	
INC DATE		AG DATE	

NASSAU COUNTY PROPERTY

PAGE 1 of 1 2

VALUATION SUMMARY

VALUATION BY		STANDARD
Tax Group: 2	Tax Dist:	
BUILDING MARKET VALUE		559,452
TOTAL MARKET OB/XF VALUE		5,219
TOTAL LAND VALUE - MARKET		400,000
TOTAL MARKET VALUE		964,671
SOH/AGL Deduction		483,918
ASSESSED VALUE		480,753
TOTAL EXEMPTION VALUE	HX HB	50,722
BASE TAXABLE VALUE		430,031
TOTAL JUST VALUE		964,671
NCON VALUE		0
INCOME VALUE		
PREVIOUS YEAR MKT VALUE		938,310

PERMIT NUM	DESCRIPTION	AMT	ISSUED
20121812	REBUILD RAILS BOT	8,000	09/04/2012
20110970	ELEC.KIT&BATH REM	300	08/15/2011
20111008	EXHAUST FANS	500	06/21/2011
20110949	PIPING & FIXTURES	2,500	06/13/2011
20110891	KIT & BATH REMODE	2,500	06/03/2011
20090826	VINYL SIDING	1,850	06/26/2009

SALES DATA

OFF RECORD Number	DATE	TYPE INST	Q U	V I	RSN CD	SALE PRICE
1736/1458	4/29/2011	WD	Q	I	02	615,000
GRANTOR: WILKINSON DIANE E						
GRANTEE: ROWAN THOMAS W III						
0348/0335	11/01/1981	WD	Q	V		17,000
GRANTOR:						
GRANTEE:						

BUILDING NOTES

BUILDING DIMENSIONS

BAS=[YR=1993] W21 FSP=[YR=1993] N12 W20 BAL=[YR=2010] W8 S41 STR=[YR=2010] W4S18E8 N4W4N14$ S23 E49 N11 W12 S4 W15 N4 W14 N53 $ S12 E20 $ W20 S41 E14 S4 E15 N4 E12 N41 $ PTR= E15 FUS=[YR=1993] E41 S32 W41 N13 BAL=[YR=2010] W8N10E8S10$ N19$ W15$ PTR=S70 FST=[YR=1994] W8 FOP=[YR=2010] N4 DCK=[YR=2010] N4W14 UOP=[YR=1993] N3W26 S49 PTO=[YR=2010] W4 S9E4N9$ S14 E48 N11W15 UGR=[YR=1993] N24 W11 N17W15S41E26$ W26N41 E19N8$ S8E6N4E8$ W8S4E8 $ W18S17E11 S24 E15 N41$ N70$.

EXTRA FEATURES

LN	OB/XF CODE	DESCRIPTION	BLD	CAP	L	W	UNITS	UT	Adj R	ADJ UNIT PRICE	ORIG COND	YEAR ON	YEAR ACTUAL	Q	% COND	OB/XF MKT VALUE	NOTES
1	0500	FP-PRE FAB	0	100	0	0	1.00	UT	3,500.00	3,500.00	100	1988	1988	3	62	2,170	
2	0810	CONCRETE A	0	100	0	0	902.00	SF	6.50	6.50	100	1988	1988	3	52	3,049	

LAND DESCRIPTION

TOTAL OB/XF 5,219

LN	USE CODE	CLS	LAND USE DESCRIPTION	CAP	RD	LOC ZONE	FRONT	DEPTH	TOT LND UTS	UNIT TYPE	DT	DPTH FACT	% COND	TOT ADJ	UNIT PRICE	ADJ UNIT PRICE	LAND VALUE	OTHER ADJUSTMENTS AND NOTES	YEAR	DENSITY	DECL	FRZ	YR	CONSRV
1	000100	C	RES	100	0006	R-1	85.00	125.00	1.00	LT		1.00	1.00	1.00	400,000.00	400,000.00	400,000							

REVIEW DATE 05/12/2019 BY KBA Total Acres: 0.00 Total Land Value: 400,000 Market: 0 Agricultural: 0 Common: 400,000 PRINTED 07/30/2025 BY SYS