BLOCK 9 LOT 15
THE PARK PB 4/28

URICH JEAN C L/E/
1632 IRENE COURT
FERNANDINA BEACH, FL 32034

2025

00-00-31-1630-0009-0150

NASSAU COUNTY PROPERTY

BUILDING CHARACTERISTICS

ELEMENT	CD	CONSTRUCTION
Exterior Wall	05	AVERAGE 60
Exterior Wall	12	CEDAR 40
Roof Structur	03	GABLE/HIP 100
Roof Cover	12	MODULAR MT 100
Interior Wall	05	DRYWALL 100
Interior Floo	14	CARPET 80
Interior Floo	08	SHT VINYL 20
Air Condition	03	CENTRAL 100
Heating Type	04	AIR DUCTED 100
Bedrooms		2 100
Bathrooms		2 100
Frame	02	WOOD FRAME 100
Stories	2.	2. 100
Units		0 100
BUD8 Adjustme	02	DIST FB 100
Occupancy	00	NONE 100
Quality	04	Quality Level 04
DOR CODE	0100	SINGLE FAMILY
MAP NUM		MKT AREA 01
NEIGHBORHOOD/LOC	1040.00	

AREA TYPE	TOTAL GROSS AREA	PCT OF BASE	YEAR	TOT ADJ AREA	SUBAREA MARKET VALUE
BAS	816	100	1993	816	79,003
FEP	56	80	1993	45	4,356
FSP	192	40	1993	77	7,455
UEP	48	60	2013	29	2,807
UGR	738	45	1993	332	32,143
UOP	546	20	1993	109	10,553
UST	572	45	1993	257	24,882
TOTALS	2,968			1,665	161,200

MARKET ADJUSTMENTS

TYPE	MDL	EFF. AREA	TOT ADJ PTS	EFF. BASE RATE	REPL. COST NEW	AYB	EYB	ECON	FNCT		NORM	% COND
0100	01	1,665	120.1200	120.12	200,000	1981	1981	0	0	0	19.40	80.60

1 SINGLE FAM – 100% - 1994 Heated Area: 816 HX Base Yr 1994

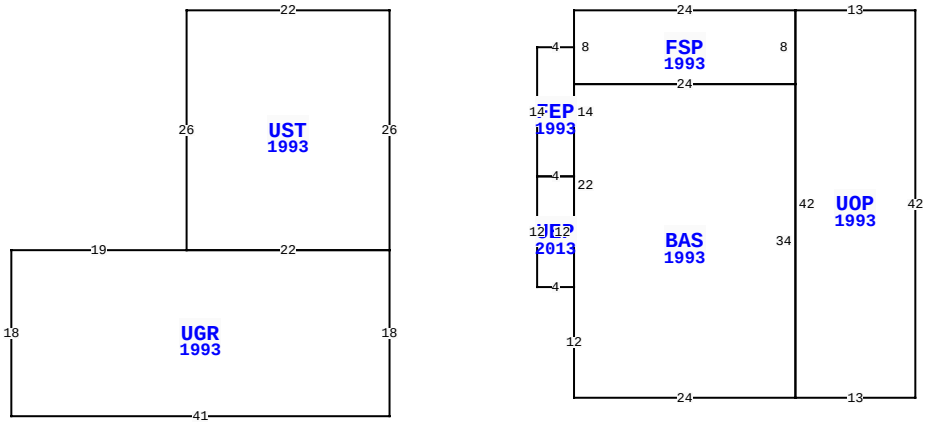

1632 IRENE CT, FERNANDINA BEACH

BLD DATE	12/26/2013 KK	LGL DATE	
XF DATE		LAND DATE	
INC DATE		AG DATE	

VALUATION SUMMARY

VALUATION BY		STANDARD
Tax Group: 2	Tax Dist:	
BUILDING MARKET VALUE		161,200
TOTAL MARKET OB/XF VALUE		3,297
TOTAL LAND VALUE - MARKET		400,000
TOTAL MARKET VALUE		564,497
SOH/AGL Deduction		437,617
ASSESSED VALUE		126,880
TOTAL EXEMPTION VALUE	HX HB	50,722
BASE TAXABLE VALUE		76,158
TOTAL JUST VALUE		564,497
NCON VALUE		0
INCOME VALUE		
PREVIOUS YEAR MKT VALUE		557,314

PERMIT NUM	DESCRIPTION	AMT	ISSUED
20132569	MTLROF	6,800	11/12/2013
20040928	H/AC	2,000	05/20/2004
20032283	XFOB	3,000	01/07/2003
B969608	ADDITION	4,500	02/16/1996
7527B	GARAGE	2,000	02/05/1993
6917	ADDITION	800	02/18/1992

SALES DATA

OFF RECORD Number	DATE	TYPE INST	Q U	V I	RSN CD	SALE PRICE
2588/0109	8/31/2022	LE	U	I	11	100
GRANTOR: URICH JEAN C						
GRANTEE: KING STACEY URICH						
0684/1555	7/14/1993	QC	Q	I	06	100
GRANTOR: MCINVALE THOMAS M						
GRANTEE: URICH JEAN C						

BUILDING NOTES

BUILDING DIMENSIONS

UST=[YR=1993] W22 S26 UGR=[YR=1993] W19 S18 E41 N18 W22$ E22 N26$ PTR= E20 FSP=[YR=1993] E24 UOP=[YR=1993] E13 S42 W13 BAS=[YR=1993] W24 N12 UEP=[YR=2013] W4 N12 FEP=[YR=1993] N14E4 S14W4$ E4 S12$ N22 E24 S34$ N42$ S8 W24 N8$ W20$.

EXTRA FEATURES

LN	OB/XF CODE	DESCRIPTION	BLD	CAP	L	W	UNITS	UT	Adj R	ADJ UNIT PRICE	ORIG COND	YEAR ON	YEAR ACTUAL	Q	% COND	OB/XF MKT VALUE	NOTES
1	0812	CONCRETE C	0	100	0	0	1,274.00	SF	4.00	4.00	100	1981	1981	3	32.5	1,656	
2	1242	WD DECK A	0	100	0	0	76.00	SF	10.00	10.00	100	2000	2000	3	20	152	
3	1242	WD DECK A	0	100	13	8	104.00	SF	17.00	17.00	100	2000	2000	3	20	354	
4	1076	TRELLIS A	0	100	12	10	120.00	SF	7.50	7.50	100	2000	2000	3	23	207	
5	0479	VF PICKET	0	100	0	0	40.00	LF	10.00	10.00	100	2005	2005	3	64	256	
6	0940	SHEDS/PORT	0	100	10	8	80.00	SF	30.00	30.00	100	2005	2005	3	22	528	
7	0680	POLE SHED	0	100	10	4	40.00	SF	10.00	10.00	100	2005	2005	3	36	144	

LAND DESCRIPTION

TOTAL OB/XF 3,297

LN	USE CODE	CLS	LAND USE DESCRIPTION	CAP	RD	LOC ZONE	FRONT	DEPTH	TOT LND UTS	UNIT TYPE	DT	DPTH FACT	% COND	TOT ADJ	UNIT PRICE	ADJ UNIT PRICE	LAND VALUE	OTHER ADJUSTMENTS AND NOTES	YEAR	DENSITY	DECL	FRZ	YR	CONSRV
1	000100	C	RES	100	0006	R-1	0.00	0.00	1.00	LT		1.00	1.00	1.00	400,000.00	400,000.00	400,000							

REVIEW DATE 05/12/2019 BY KBA Total Acres: 0.00 Total Land Value: 400,000 Market: 0 Agricultural: 0 Common: 400,000 PRINTED 07/30/2025 BY SYS