BLOCK 9 LOT 7
IN OR 1414/694
THE PARK PB 4/28

RITZ KATHRYN B
1736 LESLIE CT
FERNANDINA BEACH, FL 32034

2025

00-00-31-1630-0009-0070

NASSAU COUNTY PROPERTY

BUILDING CHARACTERISTICS

ELEMENT	CD	CONSTRUCTION
Exterior Wall	10	ABOVE AVG 50
Exterior Wall	16	WD FR STUC 50
Roof Structur	03	GABLE/HIP 100
Roof Cover	12	MODULAR MT 100
Interior Wall	05	DRYWALL 100
Interior Floo	13	LVT/LAMNT 50
Interior Floo	14	CARPET 50
Air Condition	03	CENTRAL 100
Heating Type	04	AIR DUCTED 100
Bedrooms		2 100
Bathrooms		2.5 100
Frame	02	WOOD FRAME 100
Stories	1.5	1.5 100
Units		0 100
BUD8 Adjustme	02	DIST FB 100
Occupancy	00	NONE 100
Quality	03	Quality Level 03
DOR CODE	0100	SINGLE FAMILY
MAP NUM		MKT AREA 01
NEIGHBORHOOD/LOC	1040.00	

AREA TYPE	TOTAL GROSS AREA	PCT OF BASE	YEAR	TOT ADJ AREA	SUBAREA MARKET VALUE
BAS	1,296	100	1993	1,296	160,771
FGR	984	55	2008	541	67,112
FOP	143	30	1993	43	5,334
FST	169	55	2008	93	11,537
PTO	360	5	2008	18	2,233
STR	12	10	2008	1	124
STR	56	10	2008	6	744
STR	60	10	2008	6	744
UOP	90	20	2008	18	2,233
UOP	128	20	2008	26	3,225
TOTALS	3,856			2,160	267,952

MARKET ADJUSTMENTS

TYPE	MDL	EFF. AREA	TOT ADJ PTS	EFF. BASE RATE	REPL. COST NEW	AYB	EYB	ECON	FNCT		NORM	% COND
0900	01	2,160	111.7200	147.47	318,535	1981	1991	0	0	0	15.88	84.12

1 SNGL FAM – 100% - 2010 Heated Area: 1296 HX Base Yr 2010

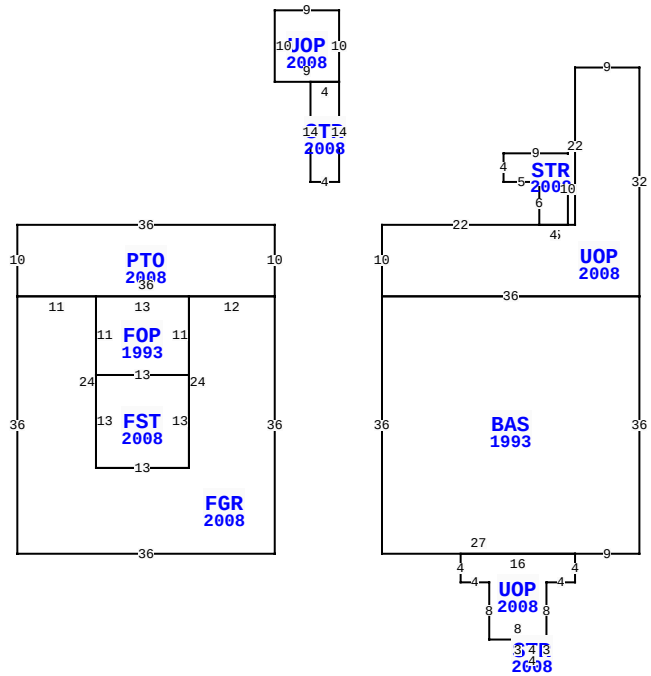

** This building has 11 Sub-Areas

1736 LESLIE CT, FERNANDINA BEACH

BLD DATE	03/24/2014 KK	LGL DATE	
XF DATE		LAND DATE	
INC DATE		AG DATE	

VALUATION SUMMARY

VALUATION BY		STANDARD
Tax Group: 2	Tax Dist:	
BUILDING MARKET VALUE		267,952
TOTAL MARKET OB/XF VALUE		8,148
TOTAL LAND VALUE - MARKET		400,000
TOTAL MARKET VALUE		676,100
SOH/AGL Deduction		414,606
ASSESSED VALUE		261,494
TOTAL EXEMPTION VALUE	HX HB WX	55,722
BASE TAXABLE VALUE		205,772
TOTAL JUST VALUE		676,100
NCON VALUE		0
INCOME VALUE		
PREVIOUS YEAR MKT VALUE		663,189

PERMIT NUM	DESCRIPTION	AMT	ISSUED
20081313	OTHER	2,750	08/19/2008
20070226	REPAIR/RRF	7,000	02/07/2007
20070009	OTHER	1,800	01/03/2007
20062551	ELEC OTHER	1,000	11/14/2006
20062354	ADDITION	140,000	10/18/2006
20011015	XFOB	1,000	06/05/2001

SALES DATA

OFF RECORD Number	DATE	TYPE INST	Q U	V I	RSN CD	SALE PRICE
1414/0694	5/23/2006	WD	Q	I		351,000
GRANTOR: MERRILL BOB D & PEGGY						
GRANTEE: RITZ MARK S & KATHR						
0311/0604	3/01/1980	WD	Q	V		12,000
GRANTOR:						
GRANTEE:						

BUILDING NOTES

BUILDING DIMENSIONS

PTO=[YR=2008] W36 S10 FGR=[YR=2008] S36 E36 N36 W12
FOP=[YR=1993] W13 S11 FST=[YR=2008] S13 E13 N13 W13$ E13
N11$ S24 W13 N24 W11$ E36 N10$ PTR=E15 UOP=[YR=2008] E22
STR=[YR=2008] N6 W5 N4 E9 S10 W4$ E5 N22 E9 S32 BAS=[YR=1993]
S36 W9 UOP=[YR=2008] S4 W4 S8 STR=[YR=2008] S3 W4 N3 E4$ W8
N8 W4 N4 E16$ W27 N36 E36$ W36 N10$ W15$ PTR=N30
UOP=[YR=2008] E9 S10 STR=[YR=2008] S14 W4 N14 E4$ W9 N10$
S30$.

EXTRA FEATURES

LN	OB/XF CODE	DESCRIPTION	BLD	CAP	L	W	UNITS	UT	Adj R	ADJ UNIT PRICE	ORIG COND	YEAR ON	YEAR ACTUAL	Q	% COND	OB/XF MKT VALUE	NOTES
1	0810	CONCRETE A	0	100	0	0	429.00	SF	6.50	6.50	100	1981	1981	3	32.5	906	
2	0810	CONCRETE A	0	100	0	0	1,266.00	SF	6.50	6.50	100	2008	2008	3	88	7,242	

LAND DESCRIPTION

TOTAL OB/XF 8,148

LN	USE CODE	CLS	LAND USE DESCRIPTION	CAP	RD	LOC ZONE	FRONT	DEPTH	TOT LND UTS	UNIT TYPE	DT	DPTH FACT	% COND	TOT ADJ	UNIT PRICE	ADJ UNIT PRICE	LAND VALUE	OTHER ADJUSTMENTS AND NOTES	YEAR	DENSITY	DECL	FRZ	YR	CONSRV
1	000100	C	RES	100	0006	R-1	0.00	0.00	1.00	LT		1.00	1.00	1.00	400,000.00	400,000.00	400,000							

REVIEW DATE 10/08/2019 BY DJA Total Acres: 0.00 Total Land Value: 400,000 Market: 0 Agricultural: 0 Common: 400,000 PRINTED 07/30/2025 BY SYS