LOTS 3 & 4
IN OR 1536/550
REPLAT OF OUTLOT 186 PB 2/53

SMITH ALVIN L & SIDNEY C/TRUSTEES OF SMITH LIVING
1612 ATLANTIC AVE
FERNANDINA BEACH, FL 32034

2025

00-00-31-1620-0003-0000

NASSAU COUNTY PROPERTY

BUILDING CHARACTERISTICS

ELEMENT	CD	CONSTRUCTION
Exterior Wall	19	COMMON BRK 100
Roof Structur	03	GABLE/HIP 100
Roof Cover	03	COMP SHNGL 100
Interior Wall	05	DRYWALL 100
Interior Floo	14	CARPET 80
Interior Floo	11	CLAY TILE 20
Air Condition	03	CENTRAL 100
Heating Type	04	AIR DUCTED 100
Bedrooms		3 100
Bathrooms		3 100
Frame	03	MASONRY 100
Stories	1.	1. 100
Units		0 100
BUD8 Adjustme	02	DIST FB 100
Occupancy	00	NONE 100
Quality	03	Quality Level 03
DOR CODE	0100	SINGLE FAMILY
MAP NUM		MKT AREA 01
NEIGHBORHOOD/LOC	1012.00	

AREA TYPE	TOTAL GROSS AREA	PCT OF BASE	YEAR	TOT ADJ AREA	SUBAREA MARKET VALUE
BAS	3,354	100	1993	3,354	324,797
DCK	156	10	2012	16	1,550
FGR	702	55	2015	386	37,380
FOP	60	30	1993	18	1,743
FOP	120	30	2015	36	3,486
SFB	252	80	2012	202	19,562
STP	42	10	2015	4	388
TOTALS	4,686			4,016	388,905

MARKET ADJUSTMENTS

TYPE	MDL	EFF. AREA	TOT ADJ PTS	EFF. BASE RATE	REPL. COST NEW	AYB	EYB	ECON	FNCT		NORM	% COND
0900	01	4,016	107.8880	142.41	571,919	1962	1980	0	0	0	32.00	68.00

1 SNGL FAM – 100% - 2001 Heated Area: 3556 HX Base Yr 2001

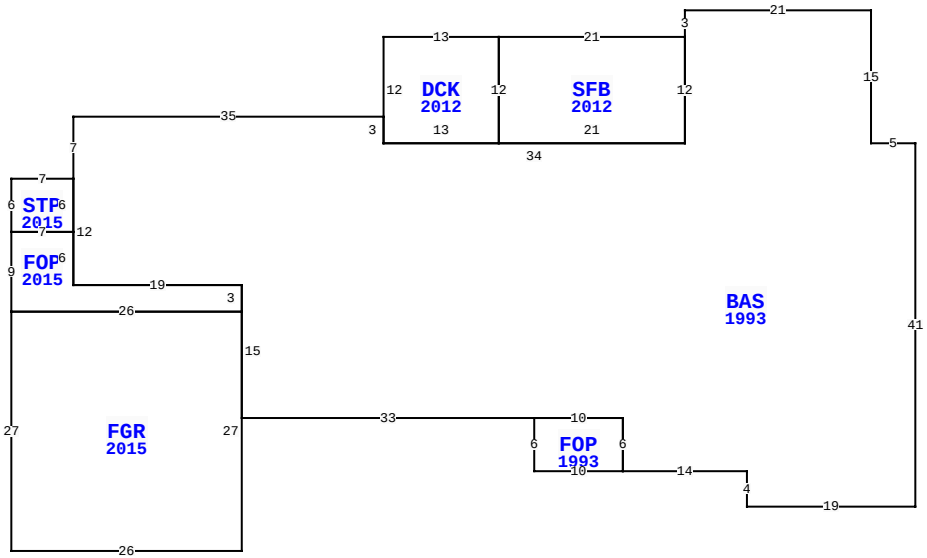

1612 ATLANTIC AV, FERNANDINA BEACH

BLD DATE		LGL DATE	
XF DATE		LAND DATE	03/27/2024 MLU
INC DATE		AG DATE	

VALUATION SUMMARY

VALUATION BY		STANDARD
Tax Group: 2	Tax Dist:	
BUILDING MARKET VALUE		388,905
TOTAL MARKET OB/XF VALUE		16,053
TOTAL LAND VALUE - MARKET		487,424
TOTAL MARKET VALUE		892,382
SOH/AGL Deduction		581,470
ASSESSED VALUE		310,912
TOTAL EXEMPTION VALUE	HX HB	50,722
BASE TAXABLE VALUE		260,190
TOTAL JUST VALUE		892,382
NCON VALUE		0
INCOME VALUE		
PREVIOUS YEAR MKT VALUE		874,547

PERMIT NUM	DESCRIPTION	AMT	ISSUED
20150702	GARAGE	35,500	04/02/2015
20010470	REPAIR/RRF	2,000	03/15/2001
2003938	REPAIR/RRF	2,000	09/11/2000

SALES DATA

OFF RECORD Number	DATE	TYPE INST	Q / U	V / I	RSN CD	SALE PRICE
1536/0550	11/16/2007	WD	Q	I	01	100
GRANTOR: SMITH ALVIN L & SIDNE						
GRANTEE: SMITH ALVIN L & SID						
0932/0320	5/15/2000	WD	Q	I		184,000
GRANTOR: LITTLE MARY JULIA P/R						
GRANTEE: SMITH ALVIN L & SID						

BUILDING NOTES

BUILDING DIMENSIONS

BAS=[YR=1993] W5 N15 W21 S3 SFB=[YR=2012] W21 DCK=[YR=2012] W13 S12 E13 N12$ S12 E21 N12$ S12 W34 N3 W35 S7 STP=[YR=2015] W7 S6 FOP=[YR=2015] S9 FGR=[YR=2015] S27 E26 N27 W26$ E26 N3 W19 N6 W7$ E7 N6$ S12 E19 S15 E33 FOP=[YR=1993] S6E10 N6W10$ E10 S6 E14 S4 E19 N41$.

EXTRA FEATURES

LN	OB/XF CODE	DESCRIPTION	BLD	CAP	L	W	UNITS	UT	Adj R	ADJ UNIT PRICE	ORIG COND	YEAR ON	YEAR ACTUAL	Q	% COND	OB/XF MKT VALUE	NOTES
1	0504	FP-ELECTRI	0	100	0	0	1.00	UT	2,000.00	2,000.00	100	1995	1995	3	76	1,520	
2	0855	CONC PAVER	0	100	0	0	1,476.00	SF	7.00	7.00	100	2015	2015	3	95	9,815	
3	0825	BRICK	0	100	0	0	444.00	SF	12.50	12.50	100	1990	1990	3	85	4,718	

LAND DESCRIPTION

TOTAL OB/XF 16,053

LN	USE CODE	CLS	LAND USE DESCRIPTION	CAP	RD	LOC ZONE	FRONT	DEPTH	TOT LND UTS	UNIT TYPE	DT	DPTH FACT	% COND	TOT ADJ	UNIT PRICE	ADJ UNIT PRICE	LAND VALUE	OTHER ADJUSTMENTS AND NOTES	YEAR	DENSITY	DECL	FRZ	YR	CONSRV
1	000100	C	RES	100		R-1	136.00	135.00	136.00	FF	1	1.12	1.00	1.12	3,200.00	3,584.00	487,424							

REVIEW DATE 07/13/2020 BY DJA Total Acres: 0.00 Total Land Value: 487,424 Market: 0 Agricultural: 0 Common: 487,424 PRINTED 07/30/2025 BY SYS