LOT 9
COASTAL COTTAGES PBK 8/161

CROWDER GEORGIA & GERALD
1560 NECTARINE ST
FERNANDINA BEACH, FL 32034

2025

00-00-31-1612-0009-0000

NASSAU COUNTY PROPERTY

BUILDING CHARACTERISTICS

ELEMENT	CD	CONSTRUCTION
Exterior Wall	10	ABOVE AVG 100
Roof Structur	08	IRREGULAR 100
Roof Cover	03	COMP SHNGL 100
Interior Wall	05	DRYWALL 100
Interior Floo	12	HARDWOOD 60
Interior Floo	14	CARPET 40
Air Condition	03	CENTRAL 100
Heating Type	04	AIR DUCTED 100
Bedrooms		3 100
Bathrooms		2.5 100
Frame	02	WOOD FRAME 100
Stories	1.5	1.5 100
Units		0 100
Quality	06	Quality Level 06
DOR CODE	0100	SINGLE FAMILY
MAP NUM		MKT AREA 01
NEIGHBORHOOD/LOC	1211.00	

AREA TYPE	TOTAL GROSS AREA	PCT OF BASE	YEAR	TOT ADJ AREA	SUBAREA MARKET VALUE
BAS	1,242	100	2017	1,242	191,445
FGR	529	55	2017	291	44,856
FOP	77	30	2017	23	3,545
FOP	110	30	2017	33	5,087
FUS	594	100	2017	594	91,561
STR	36	10	2017	4	617
TOTALS	2,588			2,187	337,110

MARKET ADJUSTMENTS

TYPE	MDL	EFF. AREA	TOT ADJ PTS	EFF. BASE RATE	REPL. COST NEW	AYB	EYB	ECON	FNCT		NORM	% COND
0320	11	2,187	158.9070	158.91	347,536	2017	2017	0	0	0	3.00	97.00

1 TOWNHOUSE - 0% - 0 Heated Area: 1836 HX Base Yr

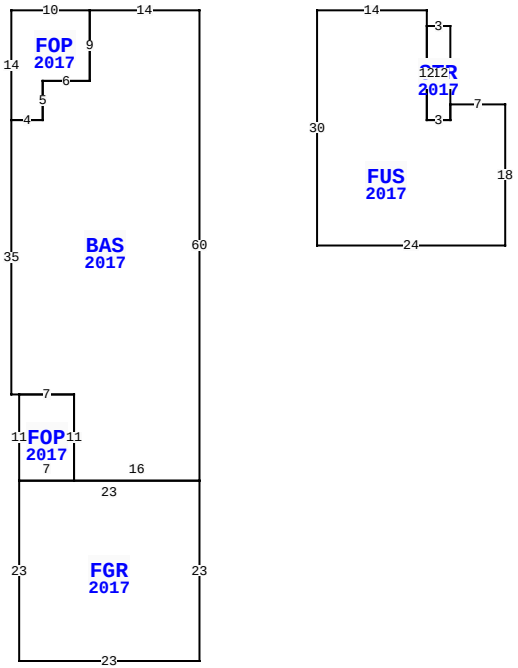

BLD DATE		LGL DATE	
XF DATE		LAND DATE	04/07/2025 MLU
INC DATE		AG DATE	

1560 NECTARINE ST, FERNANDINA BEACH

NASSAU COUNTY PROPERTY — VALUATION SUMMARY

VALUATION BY	STANDARD
Tax Group: 2	Tax Dist:
BUILDING MARKET VALUE	337,110
TOTAL MARKET OB/XF VALUE	3,527
TOTAL LAND VALUE - MARKET	200,000
TOTAL MARKET VALUE	540,637
SOH/AGL Deduction	133,582
ASSESSED VALUE	407,055
TOTAL EXEMPTION VALUE	0
BASE TAXABLE VALUE	407,055
TOTAL JUST VALUE	540,637
NCON VALUE	0
INCOME VALUE	
PREVIOUS YEAR MKT VALUE	445,460

PERMIT NUM	DESCRIPTION	AMT	ISSUED
20170935	CO ISSUED	0	02/02/2018
20170935	NEW CONSTR	236,030	03/29/2017

SALES DATA

OFF RECORD Number	DATE	TYPE INST	Q U	V I	RSN CD	SALE PRICE
2795/1014	6/05/2025	WD	Q	I	01	609,000
GRANTOR: IRWIN SERVICES LLC						
GRANTEE: CROWDER GEORGIA & G						
2197/0636	5/18/2018	WD	Q	I	02	300,000
GRANTOR: W R HOWELL COMPANY						
GRANTEE: IRWIN SERVICES LLC						

BUILDING NOTES

BUILDING DIMENSIONS

BAS=[YR=2017] W14 FOP=[YR=2017] W10 S14 E4 N5 E6 N9$ S9 W6 S5 W4 S35 E1 FOP=[YR=2017] S11 FGR=[YR=2017] S23 E23 N23 W23$ E7 N11 W7$ E7 S11 E16 N60$ PTR=E15 FUS=[YR=2017] E14 S2 STR=[YR=2017] E3 S12 W3 N12$ S12 E3 N2 E7 S18 W24 N30$ W15$.

EXTRA FEATURES

LN	OB/XF CODE	DESCRIPTION	BLD	CAP	L	W	UNITS	UT	Adj R	ADJ UNIT PRICE	ORIG COND	YEAR ON	YEAR ACTUAL	Q	% COND	OB/XF MKT VALUE	NOTES
1	0855	CONC PAVER	0	0	0	0	342.00	SF	7.00	7.00	100	2014	2014	3	94	2,250	
2	0855	CONC PAVER	0	0	0	0	148.00	SF	7.00	7.00	100	2017	2017	3	96	995	
3	0855	CONC PAVER	0	0	14	3	42.00	SF	7.00	7.00	100	2017	2017	3	96	282	

LAND DESCRIPTION

TOTAL OB/XF 3,527

LN	USE CODE	CLS	LAND USE DESCRIPTION	CAP	RD	LOC ZONE	FRONT	DEPTH	TOT LND UTS	UNIT TYPE	DT	DPTH FACT	% COND	TOT ADJ	UNIT PRICE	ADJ UNIT PRICE	LAND VALUE	OTHER ADJUSTMENTS AND NOTES	YEAR	DENSITY	DECL	FRZ	YR	CONSRV
1	000100	C	RES	0		MU-1	0.00	0.00	1.00	LT		1.00	1.00	1.00	200,000.00	200,000.00	200,000							

REVIEW DATE 04/03/2024 BY KBA Total Acres: 0.00 Total Land Value: 200,000 Market: 0 Agricultural: 0 Common: 200,000 PRINTED 07/30/2025 BY SYS