LOT 6
COASTAL COTTAGES PBK 8/161

MILLER DEBORAH L/E/
1415 COASTAL OAKS DR
FERNANDINA BEACH, FL 32034

2025

00-00-31-1612-0006-0000

BUILDING CHARACTERISTICS

ELEMENT	CD	CONSTRUCTION
Exterior Wall	10	ABOVE AVG 100
Roof Structur	08	IRREGULAR 100
Roof Cover	03	COMP SHNGL 100
Interior Wall	05	DRYWALL 100
Interior Floo	11	CLAY TILE 50
Interior Floo	14	CARPET 50
Air Condition	03	CENTRAL 100
Heating Type	04	AIR DUCTED 100
Bedrooms		3 100
Bathrooms		2.5 100
Frame	02	WOOD FRAME 100
Stories	1.5	1.5 100
Units		0 100
Quality	06	Quality Level 06
DOR CODE	0100	SINGLE FAMILY
MAP NUM		MKT AREA 01
NEIGHBORHOOD/LOC	1211.00	

AREA TYPE	TOTAL GROSS AREA	PCT OF BASE	YEAR	TOT ADJ AREA	SUBAREA MARKET VALUE
BAS	1,242	100	2017	1,242	197,264
FGR	529	55	2017	291	46,219
FOP	77	30	2017	23	3,653
FOP	110	30	2017	33	5,241
FUS	594	100	2017	594	94,344
STR	36	10	2017	4	635
TOTALS	2,588			2,187	347,356

MARKET ADJUSTMENTS

TYPE	MDL	EFF. AREA	TOT ADJ PTS	EFF. BASE RATE	REPL. COST NEW	AYB	EYB	ECON	FNCT		NORM	% COND
0320	11	2,187	163.7433	163.74	358,099	2017	2017	0	0	0	3.00	97.00

1 TOWNHOUSE - 100% - 2023 Heated Area: 1836 HX Base Yr 2023

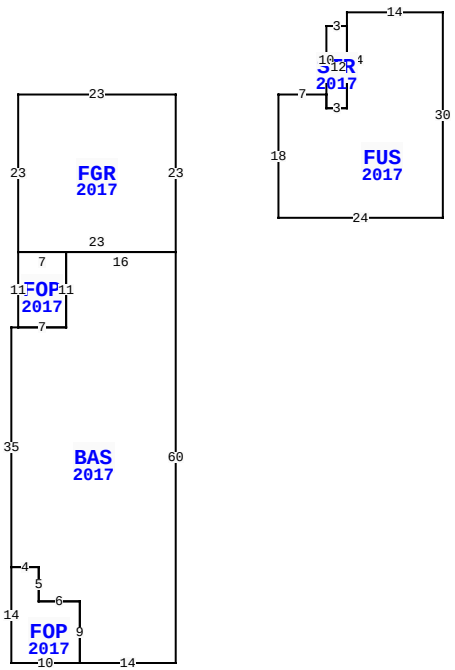

BLD DATE		LGL DATE	
XF DATE		LAND DATE	04/07/2025 MLU
INC DATE		AG DATE	

1415 COASTAL OAKS DR, FERNANDINA BEACH

NASSAU COUNTY PROPERTY

PAGE 1 of 1 2

VALUATION SUMMARY

VALUATION BY		STANDARD
Tax Group: 2	Tax Dist:	
BUILDING MARKET VALUE		347,356
TOTAL MARKET OB/XF VALUE		3,798
TOTAL LAND VALUE - MARKET		200,000
TOTAL MARKET VALUE		551,154
SOH/AGL Deduction		87,734
ASSESSED VALUE		463,420
TOTAL EXEMPTION VALUE	HX HB	50,722
BASE TAXABLE VALUE		412,698
TOTAL JUST VALUE		551,154
NCON VALUE		0
INCOME VALUE		
PREVIOUS YEAR MKT VALUE		455,542

PERMIT NUM	DESCRIPTION	AMT	ISSUED
20163008	CO ISSUED	0	04/24/2017
20163008	NEW CONSTR	238,621	11/02/2016

SALES DATA

OFF RECORD Number	DATE	TYPE INST	Q / U	V / I	RSN CD	SALE PRICE
2732/1466	8/14/2024	LE	U	I	11	100
GRANTOR: MILLER DEBORAH ANN						
GRANTEE: MILLER LAUREN						
2536/1775	2/07/2022	WD	Q	I	01	500,000
GRANTOR: JOHNSON MARK A & PAME						
GRANTEE: MILLER DEBORAH						

BUILDING NOTES

BUILDING DIMENSIONS

FGR=[YR=2017] W23 S23 FOP=[YR=2017] S11 BAS=[YR=2017] W1 S35 FOP=[YR=2017] S14 E10 N9 W6 N5 W4$ E4 S5 E6 S9 E14 N60 W16 S11 W7$ E7 N11 W7$ E23 N23$ PTR=E15 FUS=[YR=2017] E7 STR=[YR=2017] N10 E3 S12 W3 N2$ S2 E3 N14 E14 S30 W24 N18$ W15$.

EXTRA FEATURES

LN	OB/XF CODE	DESCRIPTION	BLD	CAP	L	W	UNITS	UT	Adj R	ADJ UNIT PRICE	ORIG COND	YEAR ON	YEAR ACTUAL	Q	% COND	OB/XF MKT VALUE	NOTES
1	0855	CONC PAVER	0	100	0	0	44.00	SF	7.00	7.00	100	2017	2017	3	96	296	
2	0855	CONC PAVER	0	100	4	4	16.00	SF	7.00	7.00	100	2017	2017	3	96	108	
3	0855	CONC PAVER	0	100	0	0	144.00	SF	7.00	7.00	100	2017	2017	3	96	968	
4	0855	CONC PAVER	0	100	0	0	361.00	SF	7.00	7.00	100	2017	2017	3	96	2,426	

LAND DESCRIPTION

TOTAL OB/XF 3,798

LN	USE CODE	CLS	LAND USE DESCRIPTION	CAP	RD	LOC ZONE	FRONT	DEPTH	TOT LND UTS	UNIT TYPE	DT	DPTH FACT	% COND	TOT ADJ	UNIT PRICE	ADJ UNIT PRICE	LAND VALUE	OTHER ADJUSTMENTS AND NOTES	YEAR	DENSITY	DECL	FRZ	YR	CONSRV
1	000100	C	RES	100		MU-1	0.00	0.00	1.00	LT		1.00	1.00	1.00	200,000.00	200,000.00	200,000							

REVIEW DATE 01/14/2021 BY TWA Total Acres: 0.00 Total Land Value: 200,000 Market: 0 Agricultural: 0 Common: 200,000 PRINTED 07/30/2025 BY SYS