LOT 45
COASTAL OAKS PBK 8/109

JOHNSON MARK & PAMELA J
1548 COASTAL OAKS CIR N
FERNANDINA BEACH, FL 32034

2025

00-00-31-1611-0045-0000

NASSAU COUNTY PROPERTY

BUILDING CHARACTERISTICS

ELEMENT	CD	CONSTRUCTION
Exterior Wall	10	ABOVE AVG 100
Roof Structur	03	GABLE/HIP 100
Roof Cover	03	COMP SHNGL 90
Roof Cover	12	MODULAR MT 10
Interior Wall	05	DRYWALL 100
Interior Floo	12	HARDWOOD 50
Interior Floo	14	CARPET 50
Air Condition	03	CENTRAL 100
Heating Type	04	AIR DUCTED 100
Bedrooms		4 100
Bathrooms		3 100
Frame	02	WOOD FRAME 100
Stories	1.5	1.5 100
Units		0 100
Occupancy	00	NONE 100
Quality	06	Quality Level 06
DOR CODE	0100	SINGLE FAMILY
MAP NUM		MKT AREA 01
NEIGHBORHOOD/LOC	1210.00	

AREA TYPE	TOTAL GROSS AREA	PCT OF BASE	YEAR	TOT ADJ AREA	SUBAREA MARKET VALUE
BAS	1,956	100	2017	1,956	278,451
FGR	704	55	2017	387	55,093
FOP	30	30	2017	9	1,281
FSP	161	40	2017	64	9,111
FSP	192	40	2017	77	10,962
FUS	869	100	2017	869	123,709
STP	15	10	2017	2	285
STP	18	10	2017	2	285
STR	91	10	2017	9	1,281
TOTALS	4,036			3,375	480,457

MARKET ADJUSTMENTS

TYPE	MDL	EFF. AREA	TOT ADJ PTS	EFF. BASE RATE	REPL. COST NEW	AYB	EYB	ECON	FNCT	MA	NORM	% COND
0500	01	3,375	117.0148	184.88	623,970	2017	2017	0	0	20	3.00	77.00

1 SFR CUST - 100% - 2023 Heated Area: 2825 HX Base Yr 2023

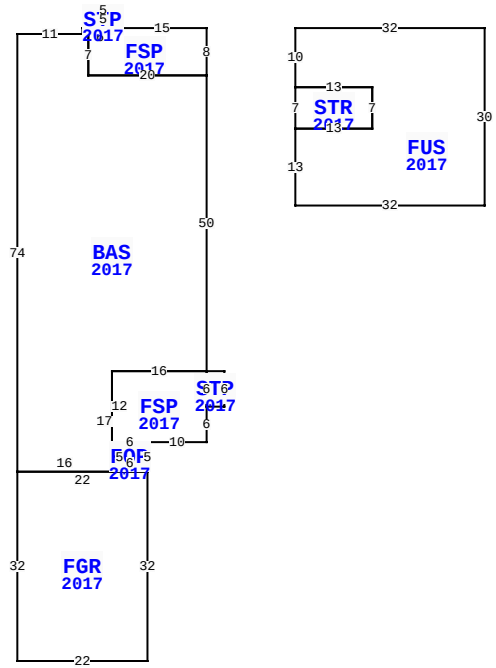

1548 N COASTAL OAKS CIR, FERNANDINA BEACH

BLD DATE		LGL DATE	
XF DATE		LAND DATE	04/02/2025 MLU
INC DATE		AG DATE	

VALUATION SUMMARY

VALUATION BY		STANDARD
Tax Group: 2	Tax Dist:	
BUILDING MARKET VALUE		480,457
TOTAL MARKET OB/XF VALUE		14,885
TOTAL LAND VALUE - MARKET		300,000
TOTAL MARKET VALUE		795,342
SOH/AGL Deduction		120,282
ASSESSED VALUE		675,060
TOTAL EXEMPTION VALUE	HX HB	50,722
BASE TAXABLE VALUE		624,338
TOTAL JUST VALUE		795,342
NCON VALUE		0
INCOME VALUE		
PREVIOUS YEAR MKT VALUE		674,133

PERMIT NUM	DESCRIPTION	AMT	ISSUED
20163354	NEW CONSTR	357,282	12/08/2016

SALES DATA

OFF RECORD Number	DATE	TYPE INST	Q / U	V / I	RSN CD	SALE PRICE
2532/0311	1/24/2022	WD	Q	I	02	759,000
GRANTOR: WAGNER HAROLD D & AUD						
GRANTEE: JOHNSON MARK & PAME						
2139/1955	8/07/2017	WD	Q	I	01	509,300
GRANTOR: ADVANTAGE HOMES BUILD						
GRANTEE: WAGNER HAROLD D & A						

BUILDING NOTES

BUILDING DIMENSIONS

BAS=[YR=2017;ORIG=-21,1] W11 S74 E16 N17 E16 N50 W20 N7 W1 $
FUS=[YR=2017;ORIG=15,0] E32 S30 W32 N13 E13 N7 W13 N10 $
FGR=[YR=2017;ORIG=-32,75] S32 E22 N32 W22 $
FSP=[YR=2017;ORIG=-10,70] E10 N6 N6 W16 S12 E6 $
FSP=[YR=2017;ORIG=0,0] W15 W6 S1 E1 S7 E20 N8 $
STR=[YR=2017;ORIG=15,17] N7 E13 S7 W13 $
FOP=[YR=2017;ORIG=-10,75] N5 W6 S5 E6 $
STP=[YR=2017;ORIG=0,64] E3 N6 W3 S6 $
STP=[YR=2017;ORIG=-15,0] N3 W5 S3 E5 $
PTR=[ORIG=0,0] E15 W15 $
.

EXTRA FEATURES

LN	OB/XF CODE	DESCRIPTION	BLD	CAP	L	W	UNITS	UT	Adj R	ADJ UNIT PRICE	ORIG COND	YEAR ON	YEAR ACTUAL	Q	% COND	OB/XF MKT VALUE	NOTES
1	0855	CONC PAVER	0	100	0	0	938.00	SF	7.00	7.00	100	2017	2017	3	96	6,303	
2	0811	CONCRETE B	0	100	0	0	1,326.00	SF	5.20	5.20	100	2017	2017	3	96	6,619	
3	0855	CONC PAVER	0	100	5	11	55.00	SF	7.00	7.00	100	2017	2017	3	96	370	
4	0855	CONC PAVER	0	100	0	0	237.00	SF	7.00	7.00	100	2017	2017	3	96	1,593	

LAND DESCRIPTION

TOTAL OB/XF 14,885

LN	USE CODE	CLS	LAND USE DESCRIPTION	CAP	RD	LOC ZONE	FRONT	DEPTH	TOT LND UTS	UNIT TYPE	DT	DPTH FACT	% COND	TOT ADJ	UNIT PRICE	ADJ UNIT PRICE	LAND VALUE	OTHER ADJUSTMENTS AND NOTES	YEAR	DENSITY	DECL	FRZ	YR	CONSRV
1	000100	C	RES	100		R-2	0.00	0.00	1.00	LT		1.00	1.00	1.00	300,000.00	300,000.00	300,000							

REVIEW DATE 04/03/2024 BY KBA Total Acres: 0.00 Total Land Value: 300,000 Market: 0 Agricultural: 0 Common: 300,000 PRINTED 07/30/2025 BY SYS