LOT 18
COASTAL OAKS PBK 8/109

NEVILLE THOMAS F &/MONSOM EILEEN Q
1541 COASTAL OAKS DR
FERNANDINA BEACH, FL 32034

2025

00-00-31-1611-0018-0000

BUILDING CHARACTERISTICS

ELEMENT	CD	CONSTRUCTION
Exterior Wall	10	ABOVE AVG 100
Roof Structur	03	GABLE/HIP 100
Roof Cover	03	COMP SHNGL 100
Interior Wall	05	DRYWALL 100
Interior Floo	11	CLAY TILE 70
Interior Floo	12	HARDWOOD 30
Air Condition	03	CENTRAL 100
Heating Type	04	AIR DUCTED 100
Bedrooms		3 100
Bathrooms		2 100
Frame	02	WOOD FRAME 100
Stories	1.	1. 100
Units		0 100
Occupancy	00	NONE 100
Quality	06	Quality Level 06
DOR CODE	0100	SINGLE FAMILY
MAP NUM		MKT AREA 01
NEIGHBORHOOD/LOC	1210.00	

AREA TYPE	TOTAL GROSS AREA	PCT OF BASE	YEAR	TOT ADJ AREA	SUBAREA MARKET VALUE
BAS	1,996	100	2021	1,996	417,320
FGR	518	55	2021	285	59,587
FOP	168	30	2021	50	10,454
FSP	154	40	2021	62	12,963
TOTALS	2,836			2,393	500,324

MARKET ADJUSTMENTS

TYPE	MDL	EFF. AREA	TOT ADJ PTS	EFF. BASE RATE	REPL. COST NEW	AYB	EYB	ECON	FNCT		NORM	% COND
0500	01	2,393	133.6622	211.19	505,378	2021	2021	0	0	0	1.00	99.00

1 SFR CUST – 100% - 2022 Heated Area: 1996 HX Base Yr 2022

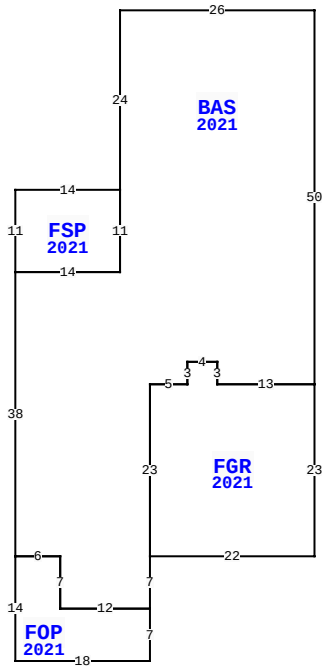

1541 COASTAL OAKS DR, FERNANDINA BEACH

BLD DATE		LGL DATE	
XF DATE		LAND DATE	04/02/2025 MLU
INC DATE		AG DATE	

NASSAU COUNTY PROPERTY

PAGE 1 of 1 2

VALUATION SUMMARY

VALUATION BY		STANDARD
Tax Group: 2	Tax Dist:	
BUILDING MARKET VALUE		500,324
TOTAL MARKET OB/XF VALUE		7,989
TOTAL LAND VALUE - MARKET		300,000
TOTAL MARKET VALUE		808,313
SOH/AGL Deduction		404,164
ASSESSED VALUE		404,149
TOTAL EXEMPTION VALUE	HX HB	50,722
BASE TAXABLE VALUE		353,427
TOTAL JUST VALUE		808,313
NCON VALUE		0
INCOME VALUE		
PREVIOUS YEAR MKT VALUE		685,363

PERMIT NUM	DESCRIPTION	AMT	ISSUED
20200865	CO ISSUED	0	09/15/2021
20200865	NEW CONSTR	0	01/12/2021

SALES DATA

OFF RECORD Number	DATE	TYPE INST	Q / U	V / I	RSN CD	SALE PRICE
2503/0424	10/05/2021	QC	U	I	11	100
GRANTOR: NEVILLE THOMAS F						
GRANTEE: NEVILLE THOMAS F &						
2497/1963	9/17/2021	WD	Q	I	01	559,000
GRANTOR: BLACKWATER HOMES LLC						
GRANTEE: NEVILLE THOMAS F						

BUILDING NOTES

BUILDING DIMENSIONS

BAS=[YR=2021] W26 S24 FSP=[YR=2021] W14 S11 E14 N11 $ S11 W14 S38 FOP=[YR=2021] S14 E18 N7 W12 N7 W6$ E6 S7 E12 N7 FGR=[YR=2021] E22 N23 W13 N3 W4 S3 W5 S23 $ N23 E5 N3 E4 S3 E13 N50 $.

EXTRA FEATURES

LN	OB/XF CODE	DESCRIPTION	BLD	CAP	L	W	UNITS	UT	Adj R	ADJ UNIT PRICE	ORIG COND	YEAR ON	YEAR ACTUAL	Q	% COND	OB/XF MKT VALUE	NOTES
1	0855	CONC PAVER	0	100	0	0	807.00	SF	10.00	10.00	100	2021	2021	3	99	7,989	

LAND DESCRIPTION

TOTAL OB/XF 7,989

LN	USE CODE	CLS	LAND USE DESCRIPTION	CAP	RD	LOC ZONE	FRONT	DEPTH	TOT LND UTS	UNIT TYPE	DT	DPTH FACT	% COND	TOT ADJ	UNIT PRICE	ADJ UNIT PRICE	LAND VALUE	OTHER ADJUSTMENTS AND NOTES	YEAR	DENSITY	DECL	FRZ	YR	CONSRV
1	000100	C	RES	100		MU-1	0.00	0.00	1.00	LT		1.00	1.00	1.00	300,000.00	300,000.00	300,000							

REVIEW DATE 09/22/2021 BY RK Total Acres: 0.00 Total Land Value: 300,000 Market: 0 Agricultural: 0 Common: 300,000 PRINTED 07/30/2025 BY SYS