LOT 2 IN OR 859/1914
R/P OF OUTLOT 44 S/D DBK A6/32

GUESS LORENA RUCKER
1609 ATLANTIC AVE
FERNANDINA BEACH, FL 32034

2025

00-00-31-1600-0044-0020

NASSAU COUNTY PROPERTY

BUILDING CHARACTERISTICS

ELEMENT	CD	CONSTRUCTION
Exterior Wall	05	AVERAGE 100
Roof Structur	03	GABLE/HIP 100
Roof Cover	03	COMP SHNGL 100
Interior Wall	05	DRYWALL 100
Interior Floo	09	PINE WOOD 80
Interior Floo	08	SHT VINYL 20
Air Condition	03	CENTRAL 100
Heating Type	04	AIR DUCTED 100
Bedrooms		2 100
Bathrooms		2 100
Frame	02	WOOD FRAME 100
Stories	1.	1. 100
Units		0 100
BUD8 Adjustme	02	DIST FB 100
Occupancy	00	NONE 100
Quality	03	Quality Level 03

DOR CODE 0100 SINGLE FAMILY
MAP NUM | MKT AREA 01
NEIGHBORHOOD/LOC 1012.00

AREA TYPE	TOTAL GROSS AREA	PCT OF BASE	YEAR	TOT ADJ AREA	SUBAREA MARKET VALUE
BAS	1,684	100	1993	1,684	137,612
FSP	132	40	2008	53	4,331
FSP	80	40	2019	32	2,615
UGR	440	45	1993	198	16,180
UOP	20	20	1993	4	327
UST	120	45	1993	54	4,413
TOTALS	2,476			2,025	165,478

MARKET ADJUSTMENTS

TYPE	MDL	EFF. AREA	TOT ADJ PTS	EFF. BASE RATE	REPL. COST NEW	AYB	EYB	ECON	FNCT		NORM	% COND
0100	01	2,025	99.9600	99.96	202,419	1948	1980	0	0	0	18.25	81.75

1 SINGLE FAM – 100% - 2002 Heated Area: 1684 HX Base Yr 2002

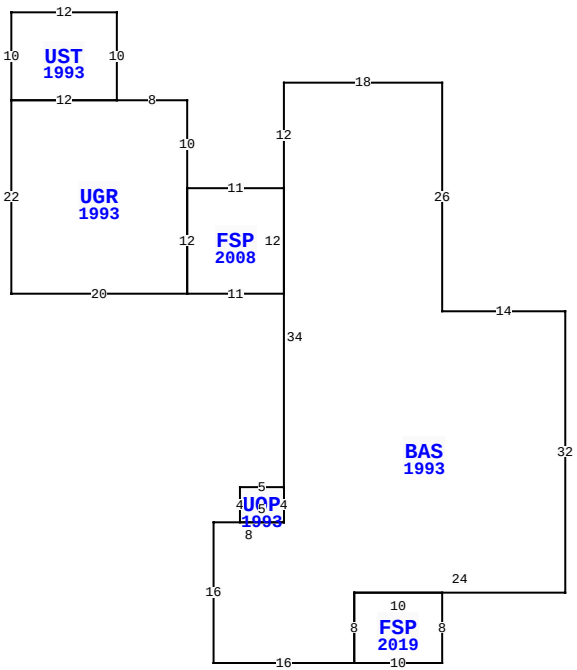

1609 ATLANTIC AV, FERNANDINA BEACH

BLD DATE		LGL DATE	
XF DATE		LAND DATE	03/27/2024 MLU
INC DATE		AG DATE	

VALUATION SUMMARY

VALUATION BY		STANDARD
Tax Group: 2	Tax Dist:	
BUILDING MARKET VALUE		165,478
TOTAL MARKET OB/XF VALUE		2,815
TOTAL LAND VALUE - MARKET		292,032
TOTAL MARKET VALUE		460,325
SOH/AGL Deduction		297,542
ASSESSED VALUE		162,783
TOTAL EXEMPTION VALUE	HX HB	50,722
BASE TAXABLE VALUE		112,061
TOTAL JUST VALUE		460,325
NCON VALUE		0
INCOME VALUE		
PREVIOUS YEAR MKT VALUE		452,584

PERMIT NUM	DESCRIPTION	AMT	ISSUED
20190515	SRENCL	750	08/30/2019
20120489	REMODEL	14,933	03/23/2012
20063212	DEMOLITION	0	12/20/2005
B9030	REPAIR/RRF	7,500	04/24/1995
8388	REPAIR/RRF	6,000	06/15/1994

SALES DATA

OFF RECORD Number	DATE	TYPE INST	Q U /	V I /	RSN CD	SALE PRICE
0859/1914	12/22/1998	QC	Q	I	06	44,500
GRANTOR: GUESS LORENA RUCKER &						
GRANTEE: GUESS LORENA RUCKER						
0700/1232	3/17/1994	WD	Q	I		60,000
GRANTOR: STOBER LORRAINE GUARD						
GRANTEE: GUESS LORENA & WILL						

BUILDING NOTES

BUILDING DIMENSIONS

BAS=[YR=1993] W14 N26 W18 S12 FSP=[YR=2008] W11 UGR=[YR=1993] N10 W8 UST=[YR=1993] N10 W12 S10 E12 $ W12 S22 E20 N12 $ S12 E11 N12 $ S34 UOP=[YR=1993] W5 S4 E5 N4 $ S4 W8 S16 E16 FSP=[YR=2019] E10 N8 W10 S8 $ N8 E24 N32 $.

EXTRA FEATURES

LN	OB/XF CODE	DESCRIPTION	BLD	CAP	L	W	UNITS	UT	Adj R	ADJ UNIT PRICE	ORIG COND	YEAR ON	YEAR ACTUAL	Q	% COND	OB/XF MKT VALUE	NOTES
1	0810	CONCRETE A	0	100	4	37	148.00	SF	6.50	6.50	100	1980	1980	3	30	289	
2	0855	CONC PAVER	0	100	0	0	396.00	SF	7.00	7.00	100	2009	2009	3	89	2,467	
3	0810	CONCRETE A	0	100	6	5	30.00	SF	6.50	6.50	100	1980	1980	3	30	59	

LAND DESCRIPTION

TOTAL OB/XF 2,815

LN	USE CODE	CLS	LAND USE DESCRIPTION	CAP	RD	LOC ZONE	FRONT	DEPTH	TOT LND UTS	UNIT TYPE	DT	DPTH FACT	% COND	TOT ADJ	UNIT PRICE	ADJ UNIT PRICE	LAND VALUE	OTHER ADJUSTMENTS AND NOTES	YEAR	DENSITY	DECL	FRZ	YR	CONSRV
1	000100	C	RES	100		R-1	78.00	162.00	78.00	FF		1.00	1.00	1.17	3,200.00	3,744.00	292,032							

REVIEW DATE 09/16/2019 BY DJX Total Acres: 0.00 Total Land Value: 292,032 Market: 0 Agricultural: 0 Common: 292,032 PRINTED 07/30/2025 BY SYS