BLOCK 16 LOT 10
OLD TOWN

HENDRY DONALD W/BUTTS CAROL C
1107 SOMERUELUS ST
FERNANDINA BEACH, FL 32034

2025

00-00-31-1580-0016-0100

NASSAU COUNTY PROPERTY

BUILDING CHARACTERISTICS

ELEMENT	CD	CONSTRUCTION
Exterior Wall	10	ABOVE AVG 100
Roof Structur	08	IRREGULAR 100
Roof Cover	03	COMP SHNGL 90
Roof Cover	13	STAND SEAM 10
Interior Wall	05	DRYWALL 100
Interior Floo	12	HARDWOOD 90
Interior Floo	15	HARDTILE 10
Air Condition	03	CENTRAL 100
Heating Type	04	AIR DUCTED 100
Bedrooms		3 100
Bathrooms		2.5 100
Frame	02	WOOD FRAME 100
Stories	2.	2. 100
Units		0 100
Quality	06	Quality Level 06
DOR CODE	0100	SINGLE FAMILY
MAP NUM		MKT AREA 01
NEIGHBORHOOD/LOC	1003.00	

AREA TYPE	TOTAL GROSS AREA	PCT OF BASE	YEAR	TOT ADJ AREA	SUBAREA MARKET VALUE
BAS	1,317	100	2024	1,317	318,925
FCP	273	25	2024	68	16,467
FOP	20	30	2024	6	1,453
FOP	155	30	2024	46	11,139
FOP	452	30	2024	136	32,934
FUS	558	100	2024	558	135,125
STR	68	10	2024	7	1,695
TOTALS	2,843			2,138	517,738

MARKET ADJUSTMENTS

TYPE	MDL	EFF. AREA	TOT ADJ PTS	EFF. BASE RATE	REPL. COST NEW	AYB	EYB	ECON	FNCT		NORM	% COND
0500	11	2,138	153.2670	242.16	517,738	2023	2023	0	0	0	0.00	100.00

1 SFR CUST – 0% - 2025 Heated Area: 1875 HX Base Yr

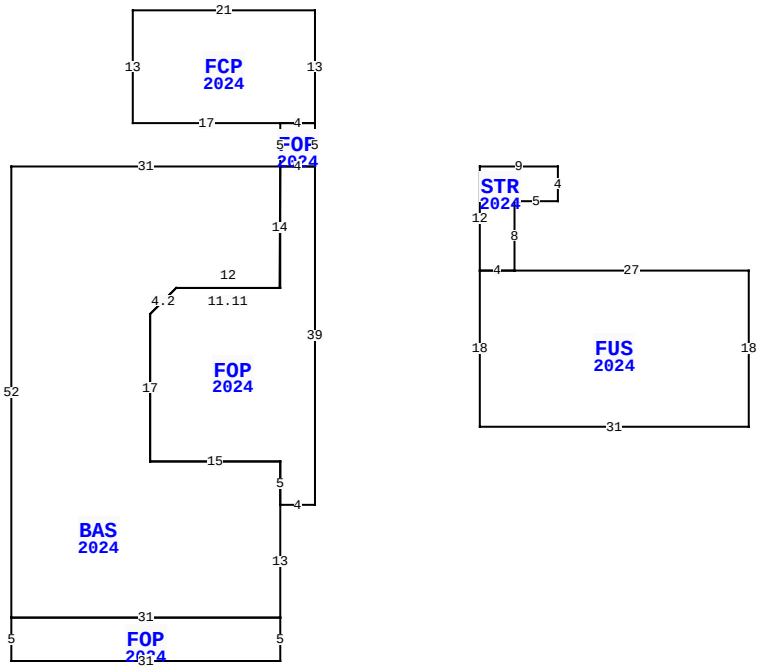

1107 SOMERUELUS ST, FERNANDINA BEACH

BLD DATE		LGL DATE	
XF DATE		LAND DATE	05/07/2025 MLU
INC DATE		AG DATE	

VALUATION SUMMARY

VALUATION BY	STANDARD
Tax Group: 2	Tax Dist:
BUILDING MARKET VALUE	517,738
TOTAL MARKET OB/XF VALUE	4,080
TOTAL LAND VALUE - MARKET	219,020
TOTAL MARKET VALUE	740,838
SOH/AGL Deduction	0
ASSESSED VALUE	740,838
TOTAL EXEMPTION VALUE	0
BASE TAXABLE VALUE	740,838
TOTAL JUST VALUE	740,838
NCON VALUE	0
INCOME VALUE	
PREVIOUS YEAR MKT VALUE	836,582

PERMIT NUM	DESCRIPTION	AMT	ISSUED
20222252	NEW CONSTR	0	07/20/2022
2022-2252			

SALES DATA

OFF RECORD Number	DATE	TYPE INST	Q / U	V / I	RSN CD	SALE PRICE
2689/306	1/16/2024	WD	Q	I	01	949,000
GRANTOR: SMITH TINA C & JAMES						
GRANTEE: HENDRY DONALD W						
2570/0342	6/13/2022	LE	U	V	11	100
GRANTOR: SMITH TINA C & JAMES						
GRANTEE: ODUM RACHEL E & MAN						

BUILDING NOTES

EXTRA FEATURES

LN	OB/XF CODE	DESCRIPTION	BLD	CAP	L	W	UNITS	UT	Adj R	ADJ UNIT PRICE	ORIG COND	YEAR ON	YEAR ACTUAL	Q	% COND	OB/XF MKT VALUE	NOTES
1	0855	CONC PAVER	0	0	0	0	408.00	SF	10.00	10.00	100	2024	2023		100	4,080	

BUILDING DIMENSIONS

BAS=[YR=2024;ORIG=16,28] E31 S14 W12 D3L3 S17 E15 S5 S13 W31 N52 $
FUS=[YR=2024;ORIG=70,40] E4 E27 S18 W31 N18 $
FOP=[YR=2024;ORIG=47,28] E4 S39 W4 N5 W15 N17 U3R3 E11.11 U14R0.1 $
FCP=[YR=2024;ORIG=30,10] E21 S13 W4 W17 N13 $
FOP=[YR=2024;ORIG=16,80] E31 S5 W31 N5 $
STR=[YR=2024;ORIG=70,40] E4 N8 E5 N4 W9 S12 $
FOP=[YR=2024;ORIG=47,23] E4 S5 W4 N5 $
.

LAND DESCRIPTION

TOTAL OB/XF 4,080

LN	USE CODE	CLS	LAND USE DESCRIPTION	CAP	RD	LOC ZONE	FRONT	DEPTH	TOT LND UTS	UNIT TYPE	DT	DPTH FACT	% COND	TOT ADJ	UNIT PRICE	ADJ UNIT PRICE	LAND VALUE	OTHER ADJUSTMENTS AND NOTES	YEAR	DENSITY	DECL	FRZ	YR	CONSRV
1	000100	C	RES	0	0010	OT-1	46.00	93.00	46.60	FF		1.00	1.00	1.00	4,700.00	4,700.00	219,020							

REVIEW DATE 12/13/2023 BY TW Total Acres: 0.00 Total Land Value: 219,020 Market: 0 Agricultural: 0 Common: 219,020 PRINTED 07/30/2025 BY SYS