BLK 7 LOT 10
OLD TOWN S/D UNR

BOSWORTH DAVID & HOPE
919 STEWART DRIVE
DALLAS, TX 75208

2025

00-00-31-1580-0007-0100

NASSAU COUNTY PROPERTY

BUILDING CHARACTERISTICS

ELEMENT	CD	CONSTRUCTION
Exterior Wall	10	ABOVE AVG 100
Roof Structur	03	GABLE/HIP 100
Roof Cover	12	MODULAR MT 100
Interior Wall	05	DRYWALL 100
Interior Floo	12	HARDWOOD 100
Air Condition	03	CENTRAL 100
Heating Type	04	AIR DUCTED 100
Bedrooms		3 100
Bathrooms		3.5 100
Frame	02	WOOD FRAME 100
Stories	2.	2. 100
Units		0 100
Quality	04	Quality Level 04
DOR CODE	0100	SINGLE FAMILY
MAP NUM		MKT AREA 01
NEIGHBORHOOD/LOC	1003.00	

AREA TYPE	TOTAL GROSS AREA	PCT OF BASE	YEAR	TOT ADJ AREA	SUBAREA MARKET VALUE
BAS	1,345	100	2018	1,345	436,072
FDC	360	35	2018	126	40,852
FOP	24	30	2018	7	2,270
FOP	224	30	2018	67	21,723
FST	48	55	2018	26	8,430
FUS	618	100	2018	618	200,366
STP	18	10	2018	2	648
STR	16	10	2018	2	648
STR	72	10	2018	7	2,270
TOTALS	2,725			2,200	713,277

MARKET ADJUSTMENTS

TYPE	MDL	EFF. AREA	TOT ADJ PTS	EFF. BASE RATE	REPL. COST NEW	AYB	EYB	ECON	FNCT		NORM	% COND
0500	12	2,200	210.4648	332.53	731,566	2018	2018	0	0	0	2.50	97.50

1 SFR CUST – 0% - 2023 Heated Area: 1963 HX Base Yr

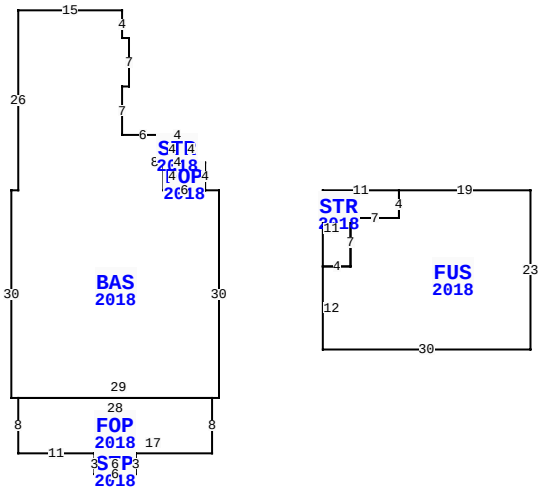

907 SAN FERNANDO ST, FERNANDINA BEACH

BLD DATE		LGL DATE	
XF DATE		LAND DATE	05/07/2025 MLU
INC DATE		AG DATE	

VALUATION SUMMARY

VALUATION BY	STANDARD
Tax Group: 2	Tax Dist:
BUILDING MARKET VALUE	713,277
TOTAL MARKET OB/XF VALUE	13,841
TOTAL LAND VALUE - MARKET	219,020
TOTAL MARKET VALUE	946,138
SOH/AGL Deduction	0
ASSESSED VALUE	946,138
TOTAL EXEMPTION VALUE	0
BASE TAXABLE VALUE	946,138
TOTAL JUST VALUE	946,138
NCON VALUE	0
INCOME VALUE	
PREVIOUS YEAR MKT VALUE	892,540

PERMIT NUM	DESCRIPTION	AMT	ISSUED
20172111	CO ISSUED	0	10/23/2018
20172267	GARAGE	9,106	07/25/2017
20172111	NEW CONSTR	222,743	07/11/2017

SALES DATA

OFF RECORD Number	DATE	TYPE INST	Q / U	V / I	RSN CD	SALE PRICE
2611/0055	12/30/2022	WD	Q	I	01	1,100,000
GRANTOR: BLACK TIM & MARY						
GRANTEE: BOSWORTH DAVID & HO						
2569/0140	6/08/2022	WD	Q	I	05	1,300,000
GRANTOR: CAMPBELL KERRIE LEE						
GRANTEE: BLACK TIM & MARY (H						

BUILDING NOTES

BUILDING DIMENSIONS

BAS=[YR=2018] W2 FOP=[YR=2018] N4 W2 STR=[YR=2018] N4W4S4E4$ W4S4E6$ W6N8 W6 N7 E1 N7 W1 N4 W15 S26 W1 S30 E1 FOP=[YR=2018] S8 E11 STP=[YR=2018] S3E6N3W6$ E17 N8 W28$ E29 N30$ PTR=E15 STR=[YR=2018] E11 FUS=[YR=2018] E19 S23 W30 N12E4 N7 E7 N4$ S4 W7 S7 W4 N11$ W15$ PTR=E15 S50 FST=[YR=2018] E4 FDC=[YR=2018] E20 S18W20 N18$ S12 W4 N12$ N50W15$.

EXTRA FEATURES

LN	OB/XF CODE	DESCRIPTION	BLD	CAP	L	W	UNITS	UT	Adj R	ADJ UNIT PRICE	ORIG COND	YEAR ON	YEAR ACTUAL	Q	% COND	OB/XF MKT VALUE	NOTES
1	0504	FP-ELECTRI	0	0	0	0	1.00	UT	2,000.00	2,000.00	100	2018	2018	3	98	1,960	
2	0825	BRICK	0	0	0	0	876.00	SF	12.50	12.50	100	2018	2018	3	99	10,841	
3	0825	BRICK	0	0	0	0	84.00	SF	12.50	12.50	100	2018	2018	3	99	1,040	

LAND DESCRIPTION

TOTAL OB/XF 13,841

LN	USE CODE	CLS	LAND USE DESCRIPTION	CAP	RD	LOC ZONE	FRONT	DEPTH	TOT LND UTS	UNIT TYPE	DT	DPTH FACT	% COND	TOT ADJ	UNIT PRICE	ADJ UNIT PRICE	LAND VALUE	OTHER ADJUSTMENTS AND NOTES	YEAR	DENSITY	DECL	FRZ	YR	CONSRV
1	000100	C	RES	0	0010	OT-1	46.00	93.00	46.60	FF		1.00	1.00	1.00	4,700.00	4,700.00	219,020							

REVIEW DATE 12/26/2022 BY TWA Total Acres: 0.00 Total Land Value: 219,020 Market: 0 Agricultural: 0 Common: 219,020 PRINTED 07/30/2025 BY SYS