BLK 6 LOTS 3,4 & 6
OLD TOWN S/D UNR

BAILEY MARK L & JENNIFER DRECHSEL
809 SAN FERNANDO ST
FERNANDINA BEACH, FL 32034

2025

00-00-31-1580-0006-0030

BUILDING CHARACTERISTICS

ELEMENT	CD	CONSTRUCTION
Exterior Wall	17	CB STUCCO 100
Roof Structur	01	FLAT 100
Roof Cover	04	BUILT-UP 100
Interior Wall	05	DRYWALL 100
Interior Floo	13	LVT/LAMNT 100
Air Condition	03	CENTRAL 100
Heating Type	04	AIR DUCTED 100
Bedrooms		3 100
Bathrooms		2.5 100
Frame	03	MASONRY 100
Stories	2.	2. 100
Units		0 100
Quality	06	Quality Level 06

DOR CODE 0100 SINGLE FAMILY
MAP NUM | MKT AREA 01
NEIGHBORHOOD/LOC 1003.00

AREA TYPE	TOTAL GROSS AREA	PCT OF BASE	YEAR	TOT ADJ AREA	SUBAREA MARKET VALUE
BAS	1,950	100	2024	1,950	421,539
FDG	500	60	2024	300	64,852
FOP	108	30	2024	32	6,917
FSP	286	40	2024	114	24,644
FSP	413	40	2024	165	35,669
FUS	655	100	2024	655	141,593
STR	88	10	2024	9	1,945
TOTALS	4,000			3,225	697,161

MARKET ADJUSTMENTS

TYPE	MDL	EFF. AREA	TOT ADJ PTS	EFF. BASE RATE	REPL. COST NEW	AYB	EYB	ECON	FNCT		NORM	% COND
0500	11	3,225	137.5032	217.26	700,664	2023	2023	0	0	0	0.50	99.50

1 SFR CUST – 100% - 2024 Heated Area: 2605 HX Base Yr 2024

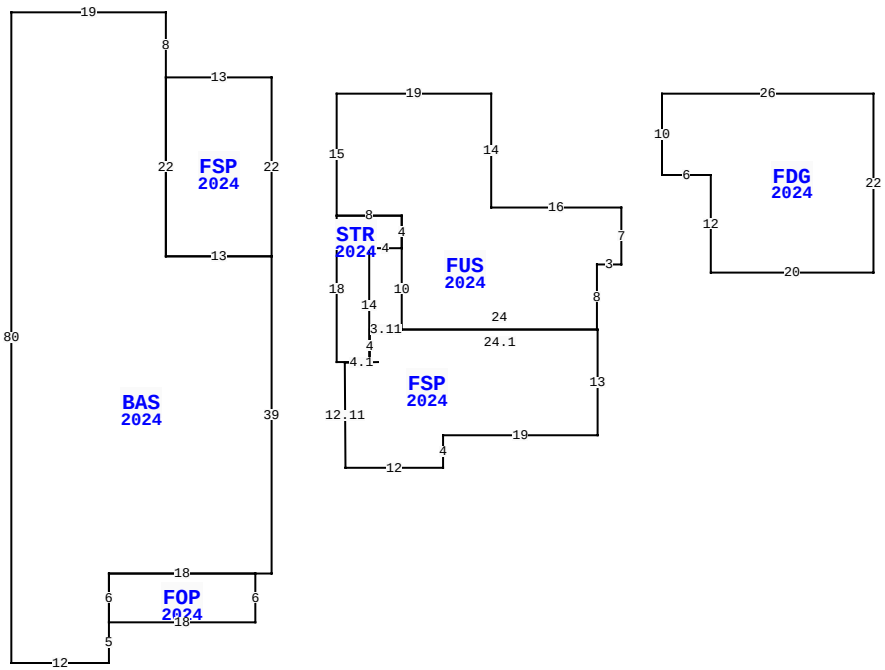

809 SAN FERNANDO ST, FERNANDINA BEACH

BLD DATE		LGL DATE	
XF DATE		LAND DATE	05/07/2025 MLU
INC DATE		AG DATE	

NASSAU COUNTY PROPERTY

PAGE 1 of 1 2

VALUATION SUMMARY

VALUATION BY		STANDARD
Tax Group: 2	Tax Dist:	
BUILDING MARKET VALUE		697,161
TOTAL MARKET OB/XF VALUE		2,000
TOTAL LAND VALUE - MARKET		438,040
TOTAL MARKET VALUE		1,137,201
SOH/AGL Deduction		43,111
ASSESSED VALUE		1,094,090
TOTAL EXEMPTION VALUE	HX HB	50,722
BASE TAXABLE VALUE		1,043,368
TOTAL JUST VALUE		1,137,201
NCON VALUE		0
INCOME VALUE		
PREVIOUS YEAR MKT VALUE		1,063,256

PERMIT NUM	DESCRIPTION	AMT	ISSUED
20211844	CO		06/26/2023
20211844	NEW CONSTR	0	01/20/2022

SALES DATA

OFF RECORD Number	DATE	TYPE INST	Q / U	V / I	RSN CD	SALE PRICE
2341/0561	2/24/2020	WD	Q	V	01	275,000
GRANTOR: BARKLEY JOE & JOHN IK						
GRANTEE: BAILEY MARK L & JEN						
1339/1089	8/05/2005	WD	U	V	07	100
GRANTOR: BARKLEY JOE						
GRANTEE: BARKLEY JOEL ETAL						

BUILDING NOTES

BUILDING DIMENSIONS

BAS=[YR=2024;ORIG=10,10] E19 S8 S22 E13 S39 W2 W18 S6 S5 W12 N80 $
FOP=[YR=2024;ORIG=22,79] E18 S6 W18 N6 $
FSP=[YR=2024;ORIG=29,40] E13 N22 W13 S22 $
FUS=[YR=2024;ORIG=50,20] E19 S14 E16 S7 W3 S8 W24 N10 N4 W8 N15 $
STR=[YR=2024;ORIG=58,35] W8 S18 E4 N14 E4 N4 $
FSP=[YR=2024;ORIG=54.1,53] N4 E3.11 E24.1 S13 W19 S4 W12 U12.11L0.1 U0.1R4.1 $
FDG=[YR=2024;ORIG=90,20] E26 S22 W20 N12 W6 N10 $
.

EXTRA FEATURES

LN	OB/XF CODE	DESCRIPTION	BLD	CAP	L	W	UNITS	UT	Adj R	ADJ UNIT PRICE	ORIG COND	YEAR ON	YEAR ACTUAL	Q	% COND	OB/XF MKT VALUE	NOTES
1	0504	FP-ELECTRI	0	100	0	0	1.00	UT	2,000.00	2,000.00	100	2024	2023		100	2,000	

LAND DESCRIPTION

TOTAL OB/XF 2,000

LN	USE CODE	CLS	LAND USE DESCRIPTION	CAP	RD	LOC ZONE	FRONT	DEPTH	TOT LND UTS	UNIT TYPE	DT	DPTH FACT	% COND	TOT ADJ	UNIT PRICE	ADJ UNIT PRICE	LAND VALUE	OTHER ADJUSTMENTS AND NOTES	YEAR	DENSITY	DECL	FRZ	YR	CONSRV
1	000100	C	RES	100	0010	OT-1	93.00	93.00	93.20	FF		1.00	1.00	1.00	4,700.00	4,700.00	438,040							

REVIEW DATE 02/21/2024 BY TW Total Acres: 0.00 Total Land Value: 438,040 Market: 0 Agricultural: 0 Common: 438,040 PRINTED 07/30/2025 BY SYS