LOT 11(EX S-1 IN OR 1137/1985)
IN OR 2137/1641
OCEAN VIEW ESTATES PB 6/25-26

ROGERS WILLIAM R & CHANDA L
870 ATLANTIC VIEW DR
FERNANDINA BEACH, FL 32034

2025

00-00-31-156E-0011-0000

NASSAU COUNTY PROPERTY

BUILDING CHARACTERISTICS

ELEMENT	CD	CONSTRUCTION
Exterior Wall	10	ABOVE AVG 60
Exterior Wall	16	WD FR STUC 40
Roof Structur	08	IRREGULAR 100
Roof Cover	03	COMP SHNGL 100
Interior Wall	05	DRYWALL 100
Interior Floo	12	HARDWOOD 80
Interior Floo	15	HARDTILE 20
Air Condition	03	CENTRAL 100
Heating Type	04	AIR DUCTED 100
Bedrooms		5 100
Bathrooms		4 100
Frame	02	WOOD FRAME 100
Stories	2.	2. 100
Units		0 100
Occupancy	00	NONE 100
Quality	05	Quality Level 05
DOR CODE	0100	SINGLE FAMILY
MAP NUM		MKT AREA 01
NEIGHBORHOOD/LOC	1081.00	

AREA TYPE	TOTAL GROSS AREA	PCT OF BASE	YEAR	TOT ADJ AREA	SUBAREA MARKET VALUE
BAS	1,422	100	1997	1,422	206,813
FGR	440	55	1997	242	35,196
FOP	30	30	1997	9	1,309
FOP	300	30	1997	90	13,090
FOP	300	30	1997	90	13,090
FUS	1,587	100	1997	1,587	230,811
TOTALS	4,079			3,440	500,309

MARKET ADJUSTMENTS

TYPE	MDL	EFF. AREA	TOT ADJ PTS	EFF. BASE RATE	REPL. COST NEW	AYB	EYB	ECON	FNCT		NORM	% COND
0900	01	3,440	120.0232	158.43	544,999	1997	2007	0	0	0	8.20	91.80

1 SNGL FAM – 100% - 2018 Heated Area: 3009 HX Base Yr 2018

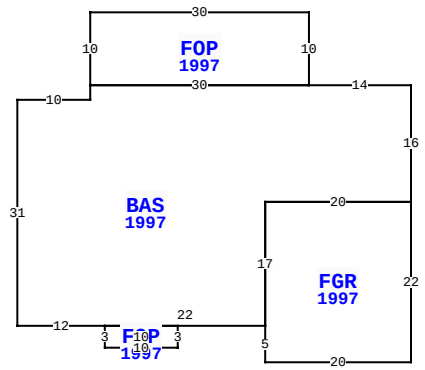

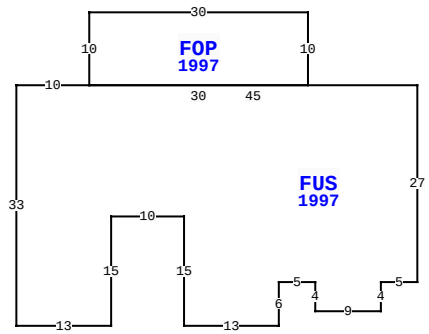

870 ATLANTIC VIEW DR, FERNANDINA BEACH

BLD DATE		LGL DATE	
XF DATE		LAND DATE	05/06/2025 MLU
INC DATE		AG DATE	

VALUATION SUMMARY

VALUATION BY		STANDARD
Tax Group: 2	Tax Dist:	
BUILDING MARKET VALUE		500,309
TOTAL MARKET OB/XF VALUE		11,477
TOTAL LAND VALUE - MARKET		486,000
TOTAL MARKET VALUE		997,786
SOH/AGL Deduction		529,335
ASSESSED VALUE		468,451
TOTAL EXEMPTION VALUE	HX HB	50,722
BASE TAXABLE VALUE		417,729
TOTAL JUST VALUE		997,786
NCON VALUE		0
INCOME VALUE		
PREVIOUS YEAR MKT VALUE		818,022

PERMIT NUM	DESCRIPTION	AMT	ISSUED
20101893	H/AC	3,000	10/29/2010
9995	NEW CONSTR	147,968	08/23/1996

SALES DATA

OFF RECORD Number	DATE	TYPE INST	Q / U	V / I	RSN CD	SALE PRICE
2137/1641	7/31/2017	WD	Q	I	01	548,000
GRANTOR: MARTINEZ CARMEN TRUST						
GRANTEE: ROGERS WILLIAM R &						
1924/1639	6/20/2014	SW	U	I	11	100
GRANTOR: MARTINEZ CARMEN						
GRANTEE: MARTINEZ CARMEN TRU						

BUILDING NOTES

BUILDING DIMENSIONS

BAS=[YR=1997] W14 FOP=[YR=1997] N10 W30 S10 E30 $ W30 S2 W10 S31 E12 FOP=[YR=1997] S3 E10 N3 W10 $ E22 FGR=[YR=1997] S5 E20 N22 W20 S17 $ N17 E20 N16 $ PTR= E15 FUS=[YR=1997] E10 FOP=[YR=1997] N10 E30 S10 W30$ E45 S27 W5 S4 W9 N4 W5S6 W13 N15 W10 S15 W13 N33 $ W15 $.

EXTRA FEATURES

LN	OB/XF CODE	DESCRIPTION	BLD	CAP	L	W	UNITS	UT	Adj R	ADJ UNIT PRICE	ORIG COND	YEAR ON	YEAR ACTUAL	Q	% COND	OB/XF MKT VALUE	NOTES
1	0500	FP-PRE FAB	0	100	0	0	1.00	UT	3,500.00	3,500.00	100	1997	1997	3	79	2,765	
2	0810	CONCRETE A	0	100	0	0	1,724.00	SF	6.50	6.50	100	1997	1997	3	72	8,068	
3	0479	VF PICKET	0	100	0	0	117.00	LF	10.00	10.00	100	2002	2002	3	55	644	

LAND DESCRIPTION

TOTAL OB/XF 11,477

LN	USE CODE	CLS	LAND USE DESCRIPTION	CAP	RD	LOC ZONE	FRONT	DEPTH	TOT LND UTS	UNIT TYPE	DT	DPTH FACT	% COND	TOT ADJ	UNIT PRICE	ADJ UNIT PRICE	LAND VALUE	OTHER ADJUSTMENTS AND NOTES	YEAR	DENSITY	DECL	FRZ	YR	CONSRV
1	000100	C	RES	100		R-1	0.00	0.00	1.00	LT		1.00	1.00	1.20	405,000.00	486,000.00	486,000							

REVIEW DATE 01/14/2021 BY TWA Total Acres: 0.00 Total Land Value: 486,000 Market: 0 Agricultural: 0 Common: 486,000 PRINTED 07/30/2025 BY SYS