N 28FT OF LOT 1
OCEAN HILLS PBK 5/372

CULLEN LAURIE LYNNE
2556A 1ST AVE
FERNANDINA BEACH, FL 32034

**2025**

**00-00-31-155H-0001-0000**

## BUILDING CHARACTERISTICS

| ELEMENT | CD | CONSTRUCTION |
|---|---|---|
| Exterior Wall | 05 | AVERAGE 100 |
| Roof Structur | 03 | GABLE/HIP 100 |
| Roof Cover | 03 | COMP SHNGL 100 |
| Interior Wall | 05 | DRYWALL 100 |
| Interior Floo | 14 | CARPET 80 |
| Interior Floo | 11 | CLAY TILE 20 |
| Air Condition | 03 | CENTRAL 100 |
| Heating Type | 04 | AIR DUCTED 100 |
| Bedrooms | | 3 100 |
| Bathrooms | | 2 100 |
| Frame | 02 | WOOD FRAME 100 |
| Stories | 2. | 2. 100 |
| Units | | 0 100 |
| Quality | 03 | Quality Level 03 |

DOR CODE 0100 SINGLE FAMILY
MAP NUM | MKT AREA 01
NEIGHBORHOOD/LOC 1043.00

| AREA TYPE | TOTAL GROSS AREA | PCT OF BASE | YEAR | TOT ADJ AREA | SUBAREA MARKET VALUE |
|---|---|---|---|---|---|
| BAL | 169 | 15 | 2012 | 25 | 4,111 |
| BAS | 580 | 100 | 1996 | 580 | 95,368 |
| DCK | 42 | 10 | 2012 | 4 | 657 |
| FGR | 299 | 55 | 1996 | 164 | 26,966 |
| FOP | 28 | 30 | 1996 | 8 | 1,316 |
| FUS | 950 | 100 | 1996 | 950 | 156,206 |
| USP | 156 | 30 | 2012 | 47 | 7,728 |
| TOTALS | 2,224 | | | 1,778 | 292,352 |

## MARKET ADJUSTMENTS

| TYPE | MDL | EFF. AREA | TOT ADJ PTS | EFF. BASE RATE | REPL. COST NEW | AYB | EYB | ECON | FNCT | | NORM | % COND |
|---|---|---|---|---|---|---|---|---|---|---|---|---|
| 0320 | 12 | 1,778 | 186.3200 | 186.32 | 331,277 | 1996 | 2000 | 0 | 0 | 0 | 11.75 | 88.25 |

1 TOWNHOUSE - 0% - 2025 Heated Area: 1530 HX Base Yr

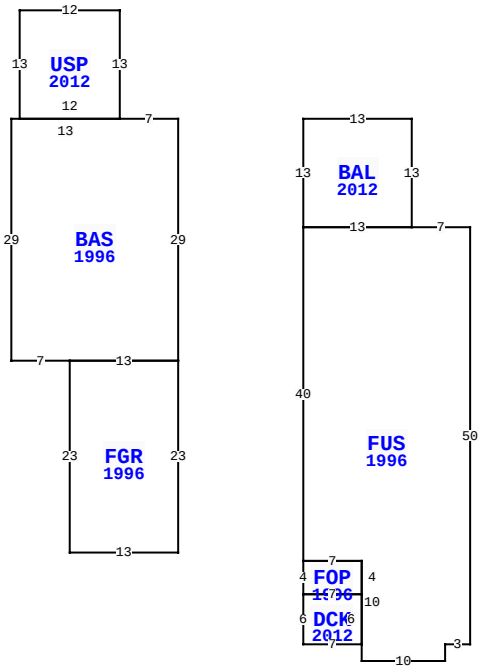


2256 1ST AVE A, FERNANDINA BEACH

| | | | |
|---|---|---|---|
| BLD DATE | | LGL DATE | |
| XF DATE | | LAND DATE | 05/08/2025 MLU |
| INC DATE | | AG DATE | |

## NASSAU COUNTY PROPERTY

PAGE 1 of 1 2

### VALUATION SUMMARY

| | |
|---|---|
| VALUATION BY | STANDARD |
| Tax Group: 2 | Tax Dist: |
| BUILDING MARKET VALUE | 292,352 |
| TOTAL MARKET OB/XF VALUE | 3,577 |
| TOTAL LAND VALUE - MARKET | 168,000 |
| TOTAL MARKET VALUE | 463,929 |
| SOH/AGL Deduction | 0 |
| ASSESSED VALUE | 463,929 |
| TOTAL EXEMPTION VALUE | 0 |
| BASE TAXABLE VALUE | 463,929 |
| TOTAL JUST VALUE | 463,929 |
| NCON VALUE | 0 |
| INCOME VALUE | |
| PREVIOUS YEAR MKT VALUE | 403,843 |

| PERMIT NUM | DESCRIPTION | AMT | ISSUED |
|---|---|---|---|
| 011586 | OTHER | 3,000 | 07/12/2001 |
| B969666 | NEW CONSTR | 136,360 | 03/13/1996 |

## SALES DATA

| OFF RECORD Number | DATE | TYPE INST | Q U | V I | RSN CD | SALE PRICE |
|---|---|---|---|---|---|---|
| 2754/1621 | 12/03/2024 | WD | Q | I | 01 | 596,500 |
| GRANTOR: LICHTSTEIN JASON S & | | | | | | |
| GRANTEE: CULLEN LAURIE LYNNE | | | | | | |
| 2394/1372 | 9/22/2020 | WD | Q | I | 01 | 355,000 |
| GRANTOR: FRASER ROGER D | | | | | | |
| GRANTEE: LICHTSTEIN JASON S | | | | | | |

## BUILDING NOTES

## BUILDING DIMENSIONS

BAS=[YR=1996] W7 USP=[YR=2012] N13 W12 S13 E12$ W13 S29 E7 FGR=[YR=1996] S23 E13 N23 W13$ E13 N29$ PTR=E15 BAL=[YR=2012] E13 S13 FUS=[YR=1996] E7 S50 W3 S2 W10 N2 DCK=[YR=2012] W7 N6 FOP=[YR=1996] N4 E7 S4 W7$ E7 S6$ N10 W7 N40E13$ W13 N13$ W15$.

## EXTRA FEATURES

| LN | OB/XF CODE | DESCRIPTION | BLD | CAP | L | W | UNITS | UT | Adj R | ADJ UNIT PRICE | ORIG COND | YEAR ON | YEAR ACTUAL | Q | % COND | OB/XF MKT VALUE | NOTES |
|---|---|---|---|---|---|---|---|---|---|---|---|---|---|---|---|---|---|
| 1 | 0811 | CONCRETE B | 0 | 0 | 0 | 0 | 591.00 | SF | 5.20 | 5.20 | 100 | 1996 | 1996 | 3 | 70 | 2,151 | |
| 2 | 0810 | CONCRETE A | 0 | 0 | 0 | 0 | 180.00 | SF | 6.50 | 6.50 | 100 | 1996 | 1996 | 3 | 70 | 819 | |
| 3 | 0940 | SHEDS/PORT | 0 | 0 | 8 | 10 | 80.00 | SF | 30.00 | 30.00 | 100 | 2000 | 2000 | 3 | 20 | 480 | |
| 4 | 0810 | CONCRETE A | 0 | 0 | 2 | 14 | 28.00 | SF | 6.50 | 6.50 | 100 | 1996 | 1996 | 3 | 70 | 127 | |

## LAND DESCRIPTION

TOTAL OB/XF 3,577

| LN | USE CODE | CLS | LAND USE DESCRIPTION | CAP | RD | LOC ZONE | FRONT | DEPTH | TOT LND UTS | UNIT TYPE | DT | DPTH FACT | % COND | TOT ADJ | UNIT PRICE | ADJ UNIT PRICE | LAND VALUE | OTHER ADJUSTMENTS AND NOTES | YEAR | DENSITY | DECL | FRZ | YR | CONSRV |
|---|---|---|---|---|---|---|---|---|---|---|---|---|---|---|---|---|---|---|---|---|---|---|---|---|
| 1 | 000100 | C | RES | 0 | | R-2 | 28.00 | 130.00 | 28.00 | FF | | 1.00 | 1.00 | 1.00 | 6,000.00 | 6,000.00 | 168,000 | | | | | | | |

REVIEW DATE 05/12/2019 BY KBA Total Acres: 0.00 Total Land Value: 168,000 Market: 0 Agricultural: 0 Common: 168,000 PRINTED 07/30/2025 BY SYS