LOT 7
PT OR 1874/171
OCEANS EIGHT PB 5/41

MACIAS TRUST/MACIAS ROBERT TRUSTEE
C/O ROBERT MACIAS, 1437 N FLETCHER AV
FERNANDINA BEACH, FL 32034

2025

00-00-31-155E-0007-0000

NASSAU COUNTY PROPERTY

BUILDING CHARACTERISTICS

ELEMENT	CD	CONSTRUCTION
Exterior Wall	16	WD FR STUC 100
Roof Structur	03	GABLE/HIP 100
Roof Cover	03	COMP SHNGL 100
Interior Wall	05	DRYWALL 100
Interior Floo	14	CARPET 80
Interior Floo	11	CLAY TILE 20
Air Condition	03	CENTRAL 100
Heating Type	04	AIR DUCTED 100
Bedrooms		3 100
Bathrooms		2.5 100
Frame	07	SPECIAL 100
Stories	2.	2. 100
Units		0 100
BUD8 Adjustme	02	DIST FB 100
Occupancy	00	NONE 100
Quality	04	Quality Level 04
DOR CODE	0100	SINGLE FAMILY
MAP NUM		MKT AREA 01
NEIGHBORHOOD/LOC	1056.00	

AREA TYPE	TOTAL GROSS AREA	PCT OF BASE	YEAR	TOT ADJ AREA	SUBAREA MARKET VALUE
BAL	288	15	1993	43	6,380
BAL	104	15	2008	16	2,374
BAL	280	15	2008	42	6,231
BAS	208	100	2008	208	30,857
FOP	12	30	1993	4	594
FOP	224	30	1993	67	9,940
FUS	1,452	100	1993	1,452	215,411
STR	56	10	1993	6	891
UGR	1,022	45	1993	460	68,243
UOP	224	20	1993	45	6,676
TOTALS	4,592			2,598	385,425

MARKET ADJUSTMENTS

TYPE	MDL	EFF. AREA	TOT ADJ PTS	EFF. BASE RATE	REPL. COST NEW	AYB	EYB	ECON	FNCT		NORM	% COND
0500	01	2,598	114.5088	180.92	470,030	1988	1988	0	0	0	18.00	82.00

1 SFR CUST – 100% - 1996 Heated Area: 1660 HX Base Yr 1996

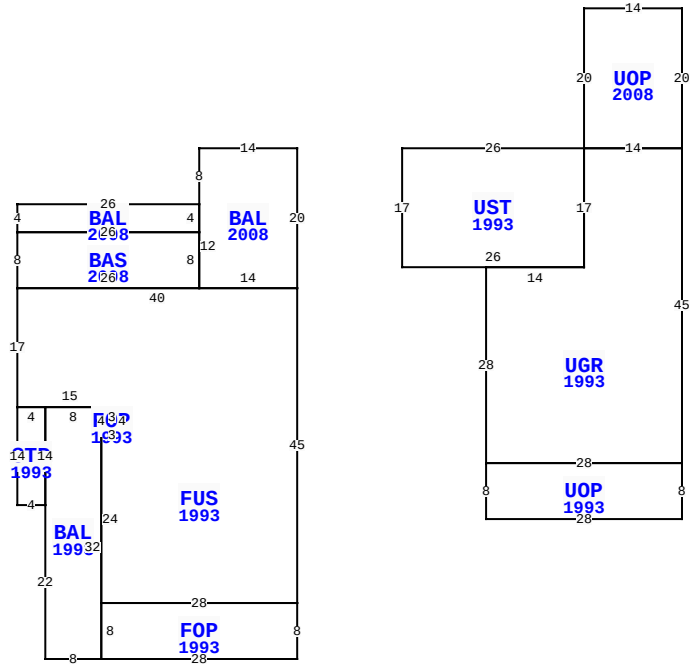

** This building has 12 Sub-Areas

1437 N FLETCHER AVE, FERNANDINA BEACH

BLD DATE	03/24/2014 KK	LGL DATE	
XF DATE		LAND DATE	05/07/2025 MLU
INC DATE		AG DATE	

VALUATION SUMMARY

VALUATION BY		STANDARD
Tax Group: 2	Tax Dist:	
BUILDING MARKET VALUE		385,425
TOTAL MARKET OB/XF VALUE		12,536
TOTAL LAND VALUE - MARKET		950,000
TOTAL MARKET VALUE		1,347,961
SOH/AGL Deduction		1,060,157
ASSESSED VALUE		287,804
TOTAL EXEMPTION VALUE	HX HB WR	55,722
BASE TAXABLE VALUE		232,082
TOTAL JUST VALUE		1,347,961
NCON VALUE		0
INCOME VALUE		
PREVIOUS YEAR MKT VALUE		1,181,260

PERMIT NUM	DESCRIPTION	AMT	ISSUED
20090261	ADDITION	1,500	02/27/2009
20072277	REPAIR/RRF	830	12/27/2007
20062110	MECH OTHER	5,000	09/14/2006
20041846	REPAIR/RRF	3,000	10/12/2004
20020178	REMODEL	1,100	02/04/2002

SALES DATA

OFF RECORD Number	DATE	TYPE INST	Q U	V I	RSN CD	SALE PRICE
1874/0171	7/31/2013	WD	U	I	30	100
GRANTOR: MACIAS ROBERT & BETTY						
GRANTEE: MACIAS TRUST						
0698/1909	2/23/1994	WD	Q	I		182,500
GRANTOR: NELSON THOMAS & ANN						
GRANTEE: MACIAS ROBERT & BET						

BUILDING NOTES

BUILDING DIMENSIONS

BAL=[YR=2008] W14 S8 BAL=[YR=2008] W26 S4 BAS=[YR=2008] S8 FUS=[YR=1993] S17 STR=[YR=1993] S14 E4 BAL=[YR=1993] S22 E8 FOP=[YR=1993] E28 N8 W28 S8$ N32 FOP=[YR=1993] E3 N4 W3 S4$ N4 W8 S14 $ N14 W4$ E15 S4 W3 S24 E28 N45 W40$ E26 N8 W26$ E26 N4$ S12 E14 N20$ PTR=E15 UST=[YR=1993] E26 UOP=[YR=2008] N20 E14 S20 UGR=[YR=1993] S45 UOP=[YR=1993] S8 W28 N8 E28$ W28 N28 E14 N17 E14$ W14 $S17 W26 N17$ W15$.

EXTRA FEATURES

LN	OB/XF CODE	DESCRIPTION	BLD	CAP	L	W	UNITS	UT	Adj R	ADJ UNIT PRICE	ORIG COND	YEAR ON	YEAR ACTUAL	Q	% COND	OB/XF MKT VALUE	NOTES
1	0810	CONCRETE A	0	100	0	0	3,342.00	SF	6.50	6.50	100	1988	1988	3	52	11,296	
2	0504	FP-ELECTRI	0	100	0	0	1.00	UT	2,000.00	2,000.00	100	1988	1988	3	62	1,240	

LAND DESCRIPTION

TOTAL OB/XF 12,536

LN	USE CODE	CLS	LAND USE DESCRIPTION	CAP	RD	LOC ZONE	FRONT	DEPTH	TOT LND UTS	UNIT TYPE	DT	DPTH FACT	% COND	TOT ADJ	UNIT PRICE	ADJ UNIT PRICE	LAND VALUE	OTHER ADJUSTMENTS AND NOTES	YEAR	DENSITY	DECL	FRZ	YR	CONSRV
1	000100	C	RES	100	0006	R-1	50.00	275.00	50.00	FF		1.00	1.00	1.00	19,000.00	19,000.00	950,000							

REVIEW DATE 10/04/2019 BY DJA Total Acres: 0.00 Total Land Value: 950,000 Market: 0 Agricultural: 0 Common: 950,000 PRINTED 07/30/2025 BY SYS