BLOCK 7 LOT 6
IN OR 2219/345
OCEAN CITY N PB 2/38

EL VENTURES LLC
PO BOX 575
HOMERVILLE, GA 31634

2025

00-00-31-1520-0007-0060

NASSAU COUNTY PROPERTY

BUILDING CHARACTERISTICS

ELEMENT	CD	CONSTRUCTION
Exterior Wall	12	CEDAR 100
Roof Structur	03	GABLE/HIP 100
Roof Cover	03	COMP SHNGL 100
Interior Wall	05	DRYWALL 100
Interior Floo	12	HARDWOOD 70
Interior Floo	14	CARPET 30
Air Condition	03	CENTRAL 100
Heating Type	04	AIR DUCTED 100
Bedrooms		3 100
Bathrooms		2.5 100
Frame	07	SPECIAL 100
Stories	2.	2. 100
Units		0 100
BUD8 Adjustme	02	DIST FB 100
Quality	05	Quality Level 05

DOR CODE 0100 SINGLE FAMILY
MAP NUM | MKT AREA 01
NEIGHBORHOOD/LOC 1051.00

AREA TYPE	TOTAL GROSS AREA	PCT OF BASE	YEAR	TOT ADJ AREA	SUBAREA MARKET VALUE
BAL	44	15	1994	7	1,397
BAL	571	15	1994	86	17,159
BAS	1,366	100	1993	1,366	272,535
FCP	400	25	1993	100	19,951
FCP	420	25	1994	105	20,949
FOP	24	30	1993	7	1,397
FOP	184	30	1993	55	10,973
FST	200	55	1993	110	21,946
STR	48	10	1993	5	998
STR	52	10	1994	5	998
TOTALS	3,309			1,846	368,300

MARKET ADJUSTMENTS

TYPE	MDL	EFF. AREA	TOT ADJ PTS	EFF. BASE RATE	REPL. COST NEW	AYB	EYB	ECON	FNCT		NORM	% COND
0900	11	1,846	162.5200	214.53	396,022	1986	2010	0	0	0	7.00	93.00

1 SNGL FAM – 0% - 0 Heated Area: 1366 HX Base Yr

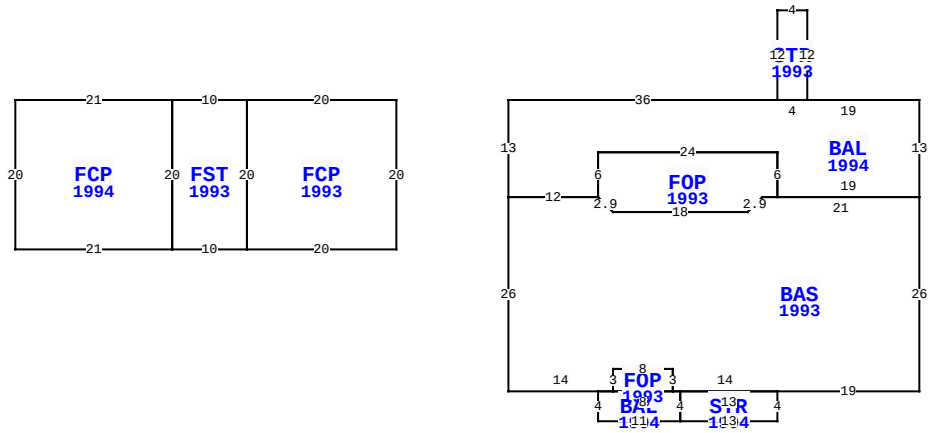

778 S FLETCHER AVE, FERNANDINA BEACH

BLD DATE		LGL DATE	
XF DATE		LAND DATE	05/07/2025 MLU
INC DATE		AG DATE	

VALUATION SUMMARY

VALUATION BY	STANDARD
Tax Group: 2	Tax Dist:
BUILDING MARKET VALUE	368,300
TOTAL MARKET OB/XF VALUE	6,469
TOTAL LAND VALUE - MARKET	1,425,000
TOTAL MARKET VALUE	1,799,769
SOH/AGL Deduction	470,094
ASSESSED VALUE	1,329,675
TOTAL EXEMPTION VALUE	0
BASE TAXABLE VALUE	1,329,675
TOTAL JUST VALUE	1,799,769
NCON VALUE	0
INCOME VALUE	
PREVIOUS YEAR MKT VALUE	1,594,847

PERMIT NUM	DESCRIPTION	AMT	ISSUED
20162997	REMODEL	18,400	11/02/2016
20122064	H/AC	4,024	10/08/2012
20120982	REPLACE ENTRY STA	3,500	05/31/2012
20120540	REPLACE DECK	16,500	03/30/2012
20110391	WINDOWS,DOORS,SID	4,100	03/18/2011
20012122	REROOF	2,100	09/26/2001

SALES DATA

OFF RECORD Number	DATE	TYPE INST	Q / U	V / I	RSN CD	SALE PRICE
2219/0345	8/21/2018	WD	Q	I	01	1,500,000
GRANTOR: FENDER DANA E & HOPE						
GRANTEE: EL VENTURES LLC						
2141/0031	7/26/2017	TD	U	I	11	100
GRANTOR: FENDER DANA E REVOCAB						
GRANTEE: FENDER DANA E & HOP						

BUILDING NOTES

BUILDING DIMENSIONS

FCP=[YR=1993] W20 FST=[YR=1993] W10 FCP=[YR=1994] W21 S20 E21 N20$ S20 E10 N20 $ S20 E20 N20 $ PTR= E15 BAL=[YR=1994] E36 STR=[YR=1993] N12 E4 S12 W4$ E19 S13 BAS=[YR=1993] S26 W19 STR=[YR=1994] S4 W13 BAL=[YR=1994] W11 N4 E2 FOP=[YR=1993] N3 E8 S3 W8$ E9 S4$ N4 E13$ W14 N3 W8 S3 W14 N26 E12 FOP=[YR=1993] N6 E24 S6 W2 D2 L2 W18 U2 L2 $ D2 R2 E18 U2 R2 E21$ W19 N6 W24 S6 W12 N13$ W15 $.

EXTRA FEATURES

LN	OB/XF CODE	DESCRIPTION	BLD	CAP	L	W	UNITS	UT	Adj R	ADJ UNIT PRICE	ORIG COND	YEAR ON	YEAR ACTUAL	Q	% COND	OB/XF MKT VALUE	NOTES
1	0810	CONCRETE A	0	0	0	0	780.00	SF	6.50	6.50	100	1986	1986	3	47	2,383	
2	0810	CONCRETE A	0	0	0	0	276.00	SF	6.50	6.50	100	1998	1998	3	73	1,310	
3	0810	CONCRETE A	0	0	0	0	580.00	SF	6.50	6.50	100	1998	1998	3	73	2,752	
4	1242	WD DECK A	0	0	3	4	12.00	SF	10.00	10.00	100	1998	1998	3	20	24	

LAND DESCRIPTION

TOTAL OB/XF 6,469

LN	USE CODE	CLS	LAND USE DESCRIPTION	CAP	RD	LOC ZONE	FRONT	DEPTH	TOT LND UTS	UNIT TYPE	DT	DPTH FACT	% COND	TOT ADJ	UNIT PRICE	ADJ UNIT PRICE	LAND VALUE	OTHER ADJUSTMENTS AND NOTES	YEAR	DENSITY	DECL	FRZ	YR	CONSRV
1	000120	C	RES OCEAN	0	0006	R-1	75.00	80.00	75.00	FF		1.00	1.00	1.00	19,000.00	19,000.00	1,425,000							

REVIEW DATE 05/12/2019 BY KBA Total Acres: 0.00 Total Land Value: 1,425,000 Market: 0 Agricultural: 0 Common: 1,425,000 PRINTED 07/30/2025 BY SYS