BLOCK 6 LOT 1
IN OR 1885/80
OCEAN CITY N PB2/38

NOLAN PETER G & JOANN
5130 BAROQUE CIRCLE NE
ATLANTA, GA 30342

2025

00-00-31-1520-0006-0010

NASSAU COUNTY PROPERTY

BUILDING CHARACTERISTICS

ELEMENT	CD	CONSTRUCTION
Exterior Wall	16	WD FR STUC 100
Roof Structur	03	GABLE/HIP 100
Roof Cover	03	COMP SHNGL 100
Interior Wall	05	DRYWALL 80
Interior Wall	06	CUST PANEL 20
Interior Floo	15	HARDTILE 60
Interior Floo	12	HARDWOOD 40
Air Condition	03	CENTRAL 100
Heating Type	04	AIR DUCTED 100
Bedrooms		4 100
Bathrooms		4 100
Frame	02	WOOD FRAME 100
Stories	2.	2. 100
Units		0 100
BUD8 Adjustme	02	DIST FB 100
Occupancy	00	NONE 100
Quality	06	Quality Level 06
DOR CODE	0100	SINGLE FAMILY
MAP NUM		MKT AREA 01
NEIGHBORHOOD/LOC	1057.00	

AREA TYPE	TOTAL GROSS AREA	PCT OF BASE	YEAR	TOT ADJ AREA	SUBAREA MARKET VALUE
BAS	1,320	100	1993	1,320	243,627
BAS	105	100	2008	105	19,380
BAS	195	100	2008	195	35,990
DCK	432	10	2008	43	7,936
FOP	90	30	2008	27	4,983
FOP	94	30	2008	28	5,168
FOP	96	30	2008	29	5,352
FUS	810	100	1993	810	149,498
FUS	180	100	2008	180	33,222
FUS	450	100	2008	450	83,055
TOTALS	3,772			3,187	588,211

MARKET ADJUSTMENTS

TYPE	MDL	EFF. AREA	TOT ADJ PTS	EFF. BASE RATE	REPL. COST NEW	AYB	EYB	ECON	FNCT		NORM	% COND
0500	01	3,187	129.0760	203.94	649,957	1938	2005	0	0	0	9.50	90.50

1 SFR CUST – 0% - 0 Heated Area: 3060 HX Base Yr

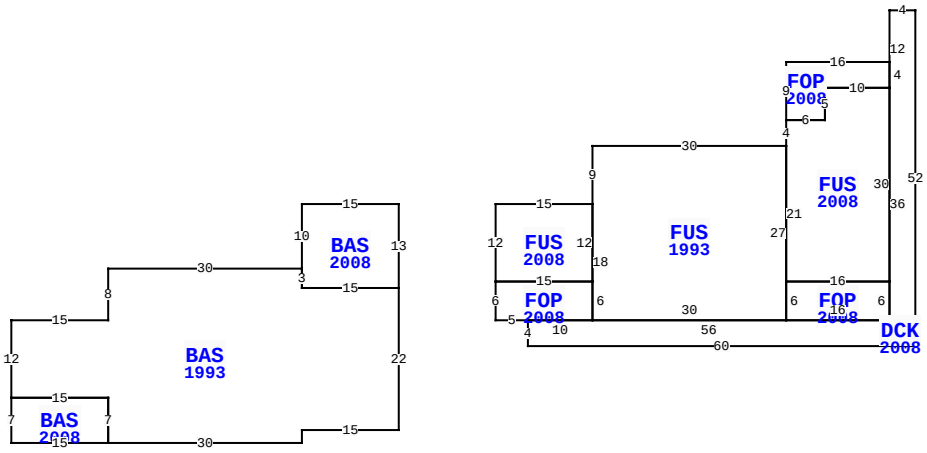

705 S FLETCHER AVE, FERNANDINA BEACH

BLD DATE		LGL DATE	
XF DATE		LAND DATE	05/07/2025 MLU
INC DATE		AG DATE	

EXTRA FEATURES

LN	OB/XF CODE	DESCRIPTION	BLD	CAP	L	W	UNITS	UT	Adj R	ADJ UNIT PRICE	ORIG COND	YEAR ON	YEAR ACTUAL	Q	% COND	OB/XF MKT VALUE	NOTES
1	0510	GARAGE WD-	0	0	26	24	624.00	SF	35.00	35.00	100	1997	1997	3	24	5,242	
2	0810	CONCRETE A	0	0	20	24	480.00	SF	6.50	6.50	100	1998	1998	3	73	2,278	
3	0810	CONCRETE A	0	0	8	6	48.00	SF	6.50	6.50	100	1998	1998	3	73	228	
4	1241	WD DECK G	0	0	10	30	300.00	UT	15.53	15.53	100	2000	2000	3	27	1,258	
5	1126	CB/STC 8"	0	0	19	6	114.00	SF	8.00	8.00	100	2000	2000	3	77	702	
6	0835	QUARY TILE	0	0	8	15	120.00	SF	10.00	10.00	100	2000	2000	3	77	924	
7	0858	SCULP CONC	0	0	32	3	96.00	SF	13.00	13.00	100	2000	2000	3	93	1,161	
8	0858	SCULP CONC	0	0	0	0	220.00	SF	13.00	13.00	100	2000	2000	3	93	2,660	
9	0855	CONC PAVER	0	0	0	0	834.00	SF	10.00	10.00	100	2008	2008	3	88	7,339	
10	0500	FP-PRE FAB	0	0	0	0	1.00	UT	3,500.00	3,500.00	100	2005	2005	3	88	3,080	

LAND DESCRIPTION

TOTAL OB/XF 24,872

LN	USE CODE	CLS	LAND USE DESCRIPTION	CAP	RD	LOC ZONE	FRONT	DEPTH	TOT LND UTS	UNIT TYPE	DT	DPTH FACT	% COND	TOT ADJ	UNIT PRICE	ADJ UNIT PRICE	LAND VALUE	OTHER ADJUSTMENTS AND NOTES	YEAR	DENSITY	DECL	FRZ	YR	CONSRV
1	000100	C	RES	0	0006	R-1	75.00	97.00	75.00	FF		1.00	1.00	0.85	7,500.00	6,375.00	478,125							

VALUATION SUMMARY

VALUATION BY	STANDARD
Tax Group: 2	Tax Dist:
BUILDING MARKET VALUE	588,211
TOTAL MARKET OB/XF VALUE	24,872
TOTAL LAND VALUE - MARKET	478,125
TOTAL MARKET VALUE	1,091,208
SOH/AGL Deduction	0
ASSESSED VALUE	1,091,208
TOTAL EXEMPTION VALUE	0
BASE TAXABLE VALUE	1,091,208
TOTAL JUST VALUE	1,091,208
NCON VALUE	0
INCOME VALUE	
PREVIOUS YEAR MKT VALUE	995,147

PERMIT NUM	DESCRIPTION	AMT	ISSUED
2024-0672	DEMO HOUSE	280,000	01/07/2025
20080280	GAS	930	02/25/2008
20061087	H/AC	7,000	05/17/2006
20060543	REMODEL	2,000	03/15/2006
20060459	REMODEL	3,000	03/06/2006
20060395	REMODEL	150,000	02/23/2006

SALES DATA

OFF RECORD Number	DATE	TYPE INST	Q / U	V / I	RSN CD	SALE PRICE
1885/0080	10/09/2013	WD	Q	I	02	740,000
GRANTOR: NORTON WILLIAM B & LY						
GRANTEE: NOLAN PETER G & JOA						
1130/0945	4/17/2003	WD	Q	I		400,000
GRANTOR: FREY JO LEE						
GRANTEE: NORTON WILLIAM B &						

BUILDING NOTES

BUILDING DIMENSIONS

BAS=[YR=2008] W15 S10 BAS=[YR=1993] W30 S8 W15 S12
BAS=[YR=2008] S7 E15 N7 W15$ E15 S7 E30 N2 E15 N22 W15 N3$ S3
E15 N13$ PTR= E15 FUS=[YR=2008] E15 FUS=[YR=1993] N9 E30
FUS=[YR=2008] N4 FOP=[YR=2008] N9 E16 S4 W10 S5 W6 $ E6 N5
E10 DCK=[YR=2008] N12 E4 S52 W60 N4 FOP=[YR=2008] W5 N6 E15
S6 W10 $ E56 N36 $ S30 FOP=[YR=2008] S6 W16 N6 E16 $ W16 N21
$ S27 W30 N18 $ S12 W15 N12 $ W15 $.

REVIEW DATE 05/12/2019 BY KBA Total Acres: 0.00 Total Land Value: 478,125 Market: 0 Agricultural: 0 Common: 478,125 PRINTED 07/30/2025 BY SYS