BLOCK 5 LOT 2 &
PARCEL IN SEC 18-3N-29
PT OR 767/751

LANGLEY FURMAN B III & JEANNIE
619 S FLETCHER AV
FERNANDINA BEACH, FL 32034

2025

00-00-31-1520-0005-0020

NASSAU COUNTY PROPERTY

BUILDING CHARACTERISTICS

ELEMENT	CD	CONSTRUCTION
Exterior Wall	07	ASB SHNGLE 100
Roof Structur	03	GABLE/HIP 100
Roof Cover	03	COMP SHNGL 100
Interior Wall	05	DRYWALL 100
Interior Floo	14	CARPET 90
Interior Floo	08	SHT VINYL 10
Air Condition	03	CENTRAL 100
Heating Type	04	AIR DUCTED 100
Bedrooms		6 100
Bathrooms		6 100
Frame	02	WOOD FRAME 100
Stories	2.	2. 100
Units		0 100
BUD8 Adjustme	02	DIST FB 100
Occupancy	00	NONE 100
Quality	03	Quality Level 03
DOR CODE	0800	MULTI-FAMILY
MAP NUM		MKT AREA 01
NEIGHBORHOOD/LOC	1057.00	

AREA TYPE	TOTAL GROSS AREA	PCT OF BASE	YEAR	TOT ADJ AREA	SUBAREA MARKET VALUE
APT	1,102	100	1993	1,102	104,323
FOP	12	30	1994	4	379
FST	42	55	2010	23	2,178
HXB	1,564	100	1993	1,564	148,059
HXY	168	15	2012	25	2,367
STP	16	10	1993	2	189
STP	16	10	1993	2	189
SXR	51	10	2012	5	473
SXR	72	10	2012	7	663
UGR	380	45	1993	171	16,188
TOTALS	3,423			2,905	275,007

MARKET ADJUSTMENTS

TYPE	MDL	EFF. AREA	TOT ADJ PTS	EFF. BASE RATE	REPL. COST NEW	AYB	EYB	ECON	FNCT		NORM	% COND
2800	01	2,905	93.0600	120.98	351,447	1937	1995	0	0	0	21.75	78.25

1 TRI PLEX - 54.72% - 1997 Heated Area: 2666 HX Base Yr 1997

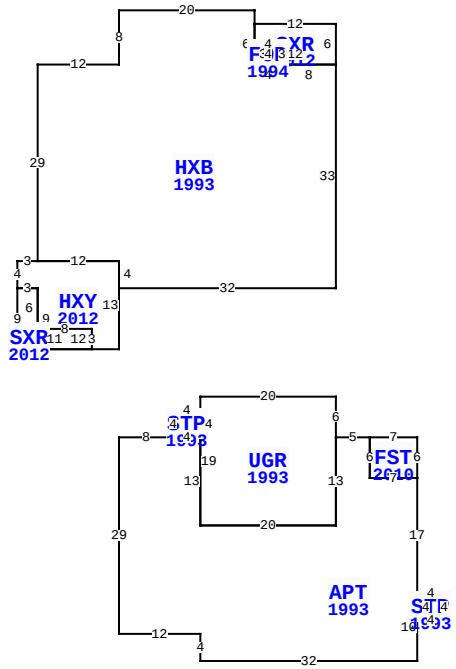

619 S FLETCHER AVE, FERNANDINA BEACH

BLD DATE		LGL DATE	
XF DATE		LAND DATE	05/07/2025 MLU
INC DATE		AG DATE	

VALUATION SUMMARY

VALUATION BY		STANDARD
Tax Group: 2	Tax Dist:	
BUILDING MARKET VALUE		312,003
TOTAL MARKET OB/XF VALUE		6,655
TOTAL LAND VALUE - MARKET		478,125
TOTAL MARKET VALUE		796,783
SOH/AGL Deduction		510,691
ASSESSED VALUE		286,092
TOTAL EXEMPTION VALUE	HX HB SX	100,722
BASE TAXABLE VALUE		185,370
TOTAL JUST VALUE		796,783
NCON VALUE		0
INCOME VALUE		
PREVIOUS YEAR MKT VALUE		712,900

PERMIT NUM	DESCRIPTION	AMT	ISSUED
20121624	RE-ROOF	9,150	08/09/2012
20120574	DECK & DOOR REPLA	8,000	04/09/2012
20112012	REPLACE SERVICE	1,000	11/08/2011
20080586	REPLACE 7 WINDOWS	2,124	04/14/2008
20071269	REPLACE WINDOWS	0	07/09/2007
20051641	CHANGE METER & RI	2,000	04/20/2005

SALES DATA

OFF RECORD Number	DATE	TYPE INST	Q U	V I	RSN CD	SALE PRICE
0767/0751	8/02/1996	WD	U	I	09	279,500
GRANTOR: FORTENBERRY HARRIETT						
GRANTEE: LANGLEY FURMAN B II						
0544/0532	6/01/1988	WD	U	I		145,000
GRANTOR: MORCH KLAUS & E A						
GRANTEE: FORTENBERRY HARRIET						

BUILDING NOTES

BUILDING DIMENSIONS

SXR=[YR=2012] W12 HXB=[YR=1993] N2 W20 S8 W12 S29
HXY=[YR=2012] W3S4 SXR=[YR=2012] S9 E11N3W8N6W3$
E3S9E12N13W12$ E12 S4 E32 N33 W8 FOP=[YR=1994] N3W4 S3E4$ W4
N6$ S6E12N6$PTR= S55 UGR=[YR=1993] S6 APT=[YR=1993]
E5FST=[YR=2010] E7S6W7N6$S6E7S17 STP=[YR=1993] E4 S4 W4 N4 $
S10 W32 N4 W12 N29 E8 STP=[YR=1993] N4 E4 S4W4 $ E4 S13 E20
N13 $ S13 W20 N19 E20 $ N55 $.

EXTRA FEATURES

LN	OB/XF CODE	DESCRIPTION	BLD	CAP	L	W	UNITS	UT	Adj R	ADJ UNIT PRICE	ORIG COND	YEAR ON	YEAR ACTUAL	Q	% COND	OB/XF MKT VALUE	NOTES
1	0825	BRICK	0	100	32	5	160.00	SF	12.50	12.50	100	1988	1988	3	83	1,660	
2	0810	CONCRETE A	0	100	0	0	600.00	SF	6.50	6.50	100	1980	1980	3	30	1,170	
3	0825	BRICK	0	100	10	12	120.00	SF	12.50	12.50	100	1988	1988	3	83	1,245	
4	0500	FP-PRE FAB	0	100	0	0	1.00	UT	3,500.00	3,500.00	100	1993	1993	3	72	2,520	
5	1242	WD DECK A	0	100	8	9	72.00	SF	4.00	4.00	100	2004	2004	3	21	60	

LAND DESCRIPTION

TOTAL OB/XF 6,655

LN	USE CODE	CLS	LAND USE DESCRIPTION	CAP	RD	LOC ZONE	FRONT	DEPTH	TOT LND UTS	UNIT TYPE	DT	DPTH FACT	% COND	TOT ADJ	UNIT PRICE	ADJ UNIT PRICE	LAND VALUE	OTHER ADJUSTMENTS AND NOTES	YEAR	DENSITY	DECL	FRZ	YR	CONSRV
1	000300	C	MULTI-FAMILY	100	0006	R-1	75.00	115.00	75.00	FF		1.00	1.00	0.85	7,500.00	6,375.00	478,125							

REVIEW DATE 06/06/2024 BY KBA Total Acres: 0.00 Total Land Value: 478,125 Market: 0 Agricultural: 0 Common: 478,125 PRINTED 07/30/2025 BY SYS

BLOCK 5 LOT 2 &
PARCEL IN SEC 18-3N-29
PT OR 767/751

LANGLEY FURMAN B III & JEANNIE
619 S FLETCHER AV
FERNANDINA BEACH, FL 32034

2025

00-00-31-1520-0005-0020

NASSAU COUNTY PROPERTY

BUILDING CHARACTERISTICS

ELEMENT	CD	CONSTRUCTION
Exterior Wall	17	CB STUCCO 100
Roof Structur	03	GABLE/HIP 100
Roof Cover	03	COMP SHNGL 100
Interior Wall	01	MINIMUM 80
Interior Wall	03	PLASTER 20
Interior Floo	07	CORK/VTILE 100
Air Condition	02	WINDOW 100
Heating Type	03	FORCED AIR 100
Bedrooms		1 100
Bathrooms		1 100
Frame	03	MASONRY 100
Stories	1.	1. 100
Units		1 100
BUD8 Adjustme	02	DIST FB 100
Occupancy	00	NONE 100
Quality	01	Quality Level 01

DOR CODE	0800	MULTI-FAMILY	
MAP NUM		MKT AREA	01
NEIGHBORHOOD/LOC	1057.00		

AREA TYPE	TOTAL GROSS AREA	PCT OF BASE	YEAR	TOT ADJ AREA	SUBAREA MARKET VALUE
BAS	480	100	1993	480	36,996
TOTALS	480			480	36,996

MARKET ADJUSTMENTS

TYPE	MDL	EFF. AREA	TOT ADJ PTS	EFF. BASE RATE	REPL. COST NEW	AYB	EYB	ECON	FNCT		NORM	% COND
0100	01	480	92.8620	92.86	44,573	1957	1990	0	0	0	17.00	83.00

2 SINGLE FAM – 100% - 1997 Heated Area: 480 HX Base Yr 1997

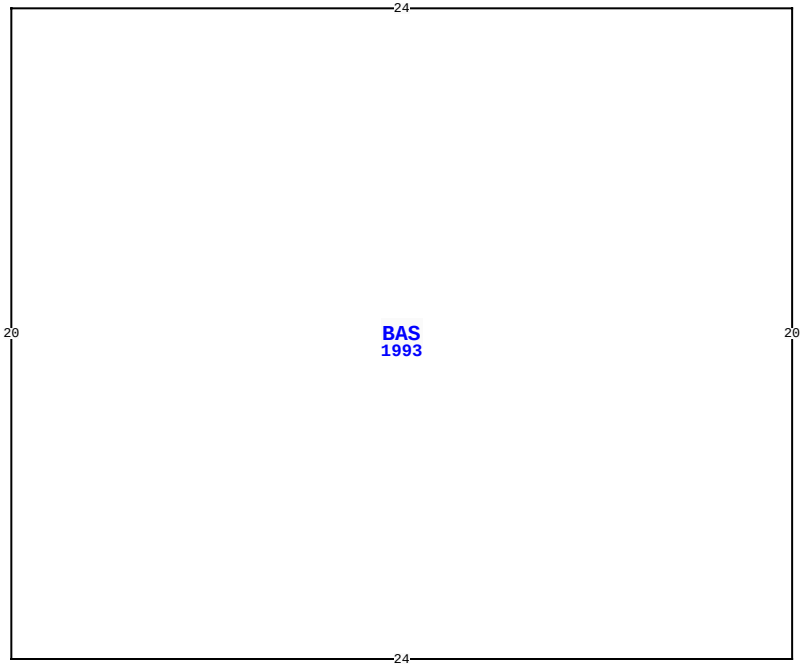

BLD DATE		LGL DATE	
XF DATE		LAND DATE	05/07/2025 MLU
INC DATE		AG DATE	

619 S FLETCHER AVE, FERNANDINA BEACH

VALUATION SUMMARY

VALUATION BY		STANDARD
Tax Group: 2	Tax Dist:	
BUILDING MARKET VALUE		312,003
TOTAL MARKET OB/XF VALUE		6,655
TOTAL LAND VALUE - MARKET		478,125
TOTAL MARKET VALUE		796,783
SOH/AGL Deduction		510,691
ASSESSED VALUE		286,092
TOTAL EXEMPTION VALUE	HX HB SX	100,722
BASE TAXABLE VALUE		185,370
TOTAL JUST VALUE		796,783
NCON VALUE		0
INCOME VALUE		
PREVIOUS YEAR MKT VALUE		712,900

PERMIT NUM	DESCRIPTION	AMT	ISSUED
20041480	REPAIR/RRF	1,000	08/17/2004
9831B	REPAIR/RRF	2,200	05/22/1996
7501B	ADDITION	2,000	01/20/1993

SALES DATA

OFF RECORD Number	DATE	TYPE INST	Q / U	V / I	RSN CD	SALE PRICE
0767/0751	8/02/1996	WD	U	I	09	279,500
GRANTOR: FORTENBERRY HARRIETT						
GRANTEE: LANGLEY FURMAN B II						
0544/0532	6/01/1988	WD	U	I		145,000
GRANTOR: MORCH KLAUS & E A						
GRANTEE: FORTENBERRY HARRIET						

BUILDING NOTES

BUILDING DIMENSIONS

BAS=[YR=1993] W24 S20 E24 N20 $.

EXTRA FEATURES

L N	OB/XF CODE	DESCRIPTION	BLD	CAP	L	W	UNITS	UT	Adj R	ADJ UNIT PRICE	ORIG COND	YEAR ON	YEAR ACTUAL	Q	% COND	OB/XF MKT VALUE	NOTES

LAND DESCRIPTION

TOTAL OB/XF 0

L N	USE CODE	CLS	LAND USE DESCRIPTION	CAP	R D	LOC ZONE	FRONT	DEPTH	TOT LND UTS	UNIT TYPE	D T	DPTH FACT	% COND	TOT ADJ	UNIT PRICE	ADJ UNIT PRICE	LAND VALUE	OTHER ADJUSTMENTS AND NOTES	YEAR	DENSITY	DECL	FRZ	YR	CONSRV

REVIEW DATE 06/06/2024 BY KBA Total Acres: 0.00 Total Land Value: 478,125 Market: 0 Agricultural: 0 Common: 478,125 PRINTED 07/30/2025 BY SYS