BLOCK 4 LOT 6
IN OR 984/1839
OAK LAWN PARK #3 PB 3/28

DOZIER RENIA C BAYER
204 S 16TH ST
FERNANDINA BEACH, FL 32034

2025

00-00-31-150C-0004-0060

NASSAU COUNTY PROPERTY

BUILDING CHARACTERISTICS

ELEMENT	CD	CONSTRUCTION
Exterior Wall	07	ASB SHNGLE 60
Exterior Wall	05	AVERAGE 40
Roof Structur	03	GABLE/HIP 100
Roof Cover	03	COMP SHNGL 100
Interior Wall	05	DRYWALL 100
Interior Floo	12	HARDWOOD 100
Air Condition	03	CENTRAL 100
Heating Type	04	AIR DUCTED 100
Bedrooms		3 100
Bathrooms		1 100
Frame	02	WOOD FRAME 100
Stories	1.	1. 100
Units		0 100
BUD8 Adjustme	02	DIST FB 100
Occupancy	00	NONE 100
Quality	03	Quality Level 03
DOR CODE	0100	SINGLE FAMILY
MAP NUM		MKT AREA 01
NEIGHBORHOOD/LOC	1011.00	

AREA TYPE	TOTAL GROSS AREA	PCT OF BASE	YEAR	TOT ADJ AREA	SUBAREA MARKET VALUE
BAS	936	100	1993	936	80,592
FOP	24	30	1993	7	603
FSP	96	40	1993	38	3,272
FST	20	55	1993	11	947
STR	16	10	1994	2	172
UDG	575	55	1993	316	27,208
TOTALS	1,667			1,310	112,794

MARKET ADJUSTMENTS

TYPE	MDL	EFF. AREA	TOT ADJ PTS	EFF. BASE RATE	REPL. COST NEW	AYB	EYB	ECON	FNCT		NORM	% COND
0100	01	1,310	108.9920	108.99	142,777	1964	1990	0	0	0	21.00	79.00

1 SINGLE FAM – 100% - 2022 Heated Area: 936 HX Base Yr 2022

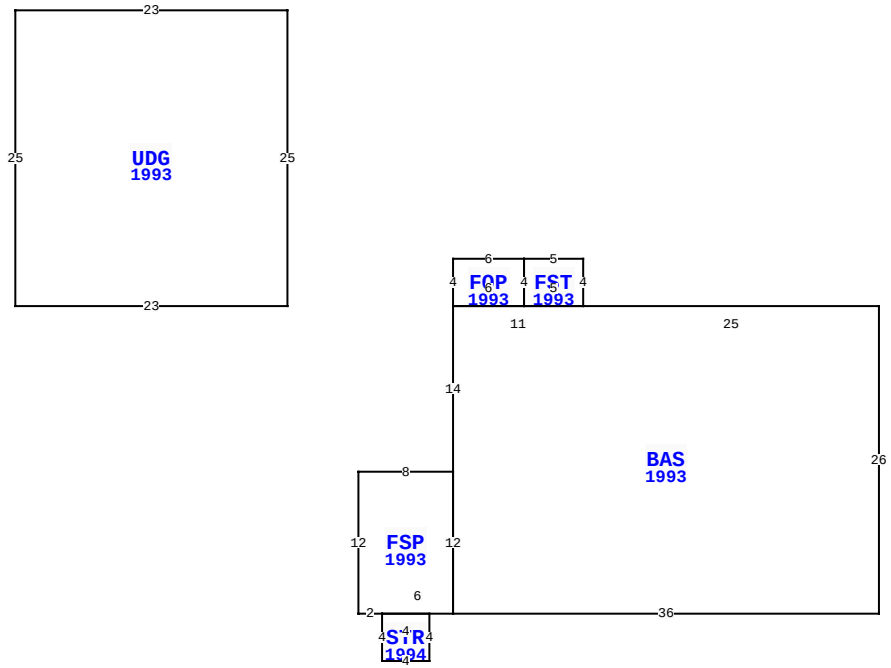

204 S 16TH ST, FERNANDINA BEACH

BLD DATE		LGL DATE	
XF DATE		LAND DATE	03/18/2024 MLU
INC DATE		AG DATE	

VALUATION SUMMARY

VALUATION BY		STANDARD
Tax Group: 2	Tax Dist:	
BUILDING MARKET VALUE		112,794
TOTAL MARKET OB/XF VALUE		420
TOTAL LAND VALUE - MARKET		191,400
TOTAL MARKET VALUE		304,614
SOH/AGL Deduction		77,879
ASSESSED VALUE		226,735
TOTAL EXEMPTION VALUE	HX HB	50,722
BASE TAXABLE VALUE		176,013
TOTAL JUST VALUE		304,614
NCON VALUE		0
INCOME VALUE		
PREVIOUS YEAR MKT VALUE		299,516

PERMIT NUM	DESCRIPTION	AMT	ISSUED
3080	REPAIR/RRF	1,955	11/01/1984

SALES DATA

OFF RECORD Number	DATE	TYPE INST	Q / U	V / I	RSN CD	SALE PRICE
0984/1839	5/07/2001	WD	Q	I	01	57,500

GRANTOR: BAYER MARGARET P
GRANTEE: BAYER RENIA C

BUILDING NOTES

BUILDING DIMENSIONS

BAS=[YR=1993] W25 FST=[YR=1993] N4 W5 FOP=[YR=1993] W6S4 E6N4$ S4E5$ W11 S14 FSP=[YR=1993] W8 S12 E2 STR=[YR=1994] S4E4N4W4$ E6 N12$ S12E36 N26$ PTR= W50 UDG=[YR=1993] N25W23S25 E23 $E50$.

EXTRA FEATURES

LN	OB/XF CODE	DESCRIPTION	BLD	CAP	L	W	UNITS	UT	Adj R	ADJ UNIT PRICE	ORIG COND	YEAR ON	YEAR ACTUAL	Q	% COND	OB/XF MKT VALUE	NOTES
1	1242	WD DECK A	0	100	21	10	210.00	SF	10.00	10.00	100	2001	2001	3	20	420	

LAND DESCRIPTION

TOTAL OB/XF 420

LN	USE CODE	CLS	LAND USE DESCRIPTION	CAP	RD	LOC ZONE	FRONT	DEPTH	TOT LND UTS	UNIT TYPE	DT	DPTH FACT	% COND	TOT ADJ	UNIT PRICE	ADJ UNIT PRICE	LAND VALUE	OTHER ADJUSTMENTS AND NOTES	YEAR	DENSITY	DECL	FRZ	YR	CONSRV
1	000100	C	RES	100	0006	R-1	87.00	137.00	87.00	FF		1.00	1.00	1.00	2,200.00	2,200.00	191,400							

REVIEW DATE 05/12/2019 BY KBA Total Acres: 0.00 Total Land Value: 191,400 Market: 0 Agricultural: 0 Common: 191,400 PRINTED 07/30/2025 BY SYS