N 45 FT OF LOT 21 S30' OF 20
MIRAMAR BEACH PB 2/61

MURPHY LEIF & PAULA
5129 ANNESWAY DRIVE
NASHVILLE, TN 37205

2025

00-00-31-1460-0021-0010

BUILDING CHARACTERISTICS

ELEMENT	CD	CONSTRUCTION
Exterior Wall	11	BD/BTN AVG 50
Exterior Wall	23	REINF CONC 50
Roof Structur	03	GABLE/HIP 100
Roof Cover	03	COMP SHNGL 100
Interior Wall	05	DRYWALL 100
Interior Floo	11	CLAY TILE 50
Interior Floo	12	HARDWOOD 50
Air Condition	03	CENTRAL 100
Heating Type	04	AIR DUCTED 100
Bedrooms		3 100
Bathrooms		2 100
Frame	07	SPECIAL 100
Stories	2.	2. 100
Units		0 100
BUD8 Adjustme	02	DIST FB 100
Occupancy	00	NONE 100
Quality	04	Quality Level 04
DOR CODE	0100	SINGLE FAMILY
MAP NUM		MKT AREA 01
NEIGHBORHOOD/LOC	1051.00	

AREA TYPE	TOTAL GROSS AREA	PCT OF BASE	YEAR	TOT ADJ AREA	SUBAREA MARKET VALUE
BAL	20	15	1995	3	447
BAS	862	100	1993	862	128,311
FGR	750	55	1993	412	61,327
FOP	40	30	1993	12	1,786
FOP	245	30	1993	74	11,015
FUS	1,715	100	1993	1,715	255,281
PTO	532	5	1995	27	4,019
STR	52	10	1995	5	745
UOP	216	20	1995	43	6,401
UST	16	45	1995	7	1,042
TOTALS	4,448			3,160	470,373

MARKET ADJUSTMENTS

TYPE	MDL	EFF. AREA	TOT ADJ PTS	EFF. BASE RATE	REPL. COST NEW	AYB	EYB	ECON	FNCT		NORM	% COND
0500	01	3,160	113.5050	179.34	566,714	1972	1990	0	0	0	17.00	83.00

1 SFR CUST – 0% - 2024 Heated Area: 2577 HX Base Yr

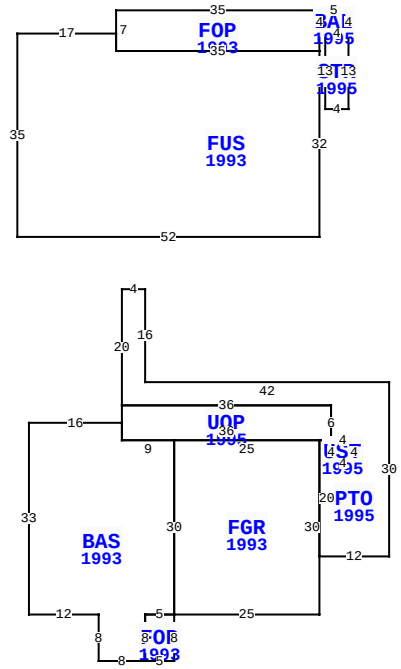

1628 S FLETCHER AVE, FERNANDINA BEACH

BLD DATE		LGL DATE	
XF DATE		LAND DATE	05/07/2025 MLU
INC DATE		AG DATE	

NASSAU COUNTY PROPERTY

PAGE 1 of 1 2

VALUATION SUMMARY

VALUATION BY	STANDARD
Tax Group: 2	Tax Dist:
BUILDING MARKET VALUE	470,373
TOTAL MARKET OB/XF VALUE	19,954
TOTAL LAND VALUE - MARKET	1,425,000
TOTAL MARKET VALUE	1,915,327
SOH/AGL Deduction	24,331
ASSESSED VALUE	1,890,996
TOTAL EXEMPTION VALUE	0
BASE TAXABLE VALUE	1,890,996
TOTAL JUST VALUE	1,915,327
NCON VALUE	17,290
INCOME VALUE	
PREVIOUS YEAR MKT VALUE	1,703,369

PERMIT NUM	DESCRIPTION	AMT	ISSUED
2023-0767	REMODEL	448,000	12/27/2023
20110770	H/AC	3,500	05/19/2011
959419	REMODEL	3,100	11/09/1995

SALES DATA

OFF RECORD Number	DATE	TYPE INST	Q U	V I	RSN CD	SALE PRICE
2665/1489	9/07/2023	WD	U	I	11	100
GRANTOR: HUNTLEY THOMAS B						
GRANTEE: MURPHY LEIF & PAULA						
2653/880	7/11/2023	WD	U	I	11	100
GRANTOR: BRADDOCK THOMAS H JR						
GRANTEE: HUNTLEY THOMAS B						

BUILDING NOTES

BUILDING DIMENSIONS

PTO=[YR=1995] W42N16W4S20 UOP=[YR=1995] S3 BAS=[YR=1993] W16S33E12 S8E8 FOP=[YR=1993] E5N8W5S8$ N8E5 FGR=[YR=1993] E25 N30W25S30$ N30W9N3 $ S3E36 UST=[YR=1995] S4E4N4W4$ N6 W36$ E36S6 E4S4W4N4W2 S20E12 N30$ PTR=W12N25 FUS=[YR=1993] N32 FOP=[YR=1993] N3 BAL=[YR=1995] E1 STR=[YR=1995] S13E4N13W4$ E4N4W5S4$ N4W35S7 E35$ W35N3 W17S35E52$ S25E12$.

EXTRA FEATURES

LN	OB/XF CODE	DESCRIPTION	BLD	CAP	L	W	UNITS	UT	Adj R	ADJ UNIT PRICE	ORIG COND	YEAR ON	YEAR ACTUAL	Q	% COND	OB/XF MKT VALUE	NOTES
3	1241	WD DECK G	0	0	16	10	160.00	UT	17.25	17.25	100	2011	2011	3	60	1,656	
4	0416	DUNEWALKS	0	0	0	0	336.00	SF	15.00	15.00	100	1995	1995	3	20	1,008	
6	0855	CONC PAVER	0	0	0	0	1,729.00	SF	10.00	10.00	100	2025	2024		100	17,290	

LAND DESCRIPTION

TOTAL OB/XF 19,954

LN	USE CODE	CLS	LAND USE DESCRIPTION	CAP	RD	LOC ZONE	FRONT	DEPTH	TOT LND UTS	UNIT TYPE	DT	DPTH FACT	% COND	TOT ADJ	UNIT PRICE	ADJ UNIT PRICE	LAND VALUE	OTHER ADJUSTMENTS AND NOTES	YEAR	DENSITY	DECL	FRZ	YR	CONSRV
1	000120	C	RES OCEAN	0	0006	R-1	75.00	150.00	75.00	FF		1.00	1.00	1.00	19,000.00	19,000.00	1,425,000							

REVIEW DATE 07/09/2024 BY DJ Total Acres: 0.00 Total Land Value: 1,425,000 Market: 0 Agricultural: 0 Common: 1,425,000 PRINTED 07/30/2025 BY SYS