LOT 20 (EX S30 FT)
IN OR 2485/965
MIRAMAR BEACH PB 2/61

78 SHERIDAN ATLANTA LLC
3100 S FLETCHER AVE
FERNANDINA BEACH, FL 32046

2025

00-00-31-1460-0020-0000

BUILDING CHARACTERISTICS

ELEMENT	CD	CONSTRUCTION
Exterior Wall	12	CEDAR 60
Exterior Wall	17	CB STUCCO 40
Roof Structur	03	GABLE/HIP 100
Roof Cover	03	COMP SHNGL 100
Interior Wall	05	DRYWALL 100
Interior Floo	11	CLAY TILE 60
Interior Floo	12	HARDWOOD 40
Air Condition	03	CENTRAL 100
Heating Type	04	AIR DUCTED 100
Bedrooms		4 100
Bathrooms		4 100
Frame	03	MASONRY 100
Stories	2.	2. 100
Units		0 100
BUD8 Adjustme	02	DIST FB 100
Quality	06	Quality Level 06
DOR CODE	0100	SINGLE FAMILY
MAP NUM		MKT AREA 01
NEIGHBORHOOD/LOC	1051.00	

AREA TYPE	TOTAL GROSS AREA	PCT OF BASE	YEAR	TOT ADJ AREA	SUBAREA MARKET VALUE
BAL	270	15	2024	40	9,012
BAL	288	15	2024	43	9,687
BAS	720	100	1993	720	162,205
BAS	90	100	2005	90	20,275
BAS	90	100	2005	90	20,275
FOP	30	30	2005	9	2,027
FOP	30	30	2005	9	2,027
FOP	336	30	2014	101	22,753
FUS	1,196	100	1993	1,196	269,440
UGR	528	45	1993	238	53,618
TOTALS	4,472			2,715	611,646

MARKET ADJUSTMENTS

TYPE	MDL	EFF. AREA	TOT ADJ PTS	EFF. BASE RATE	REPL. COST NEW	AYB	EYB	ECON	FNCT		NORM	% COND
0500	11	2,715	166.7635	263.49	715,375	1970	1995	0	0	0	14.50	85.50

1 SFR CUST – 0% - 0 Heated Area: 2096 HX Base Yr

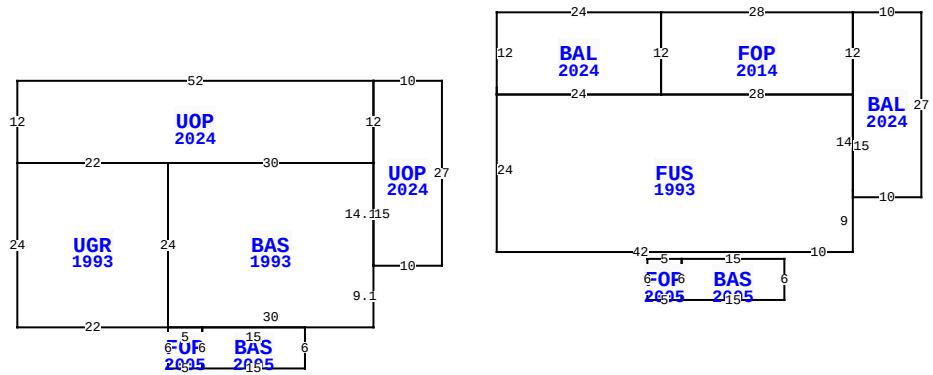

** This building has 12 Sub-Areas

1600 S FLETCHER AVE, FERNANDINA BEACH

BLD DATE	10/06/2014 KK	LGL DATE	
XF DATE		LAND DATE	05/07/2025 MLU
INC DATE		AG DATE	

NASSAU COUNTY PROPERTY

PAGE 1 of 1 2

VALUATION SUMMARY

VALUATION BY	STANDARD
Tax Group: 2	Tax Dist:
BUILDING MARKET VALUE	611,646
TOTAL MARKET OB/XF VALUE	16,851
TOTAL LAND VALUE - MARKET	1,710,000
TOTAL MARKET VALUE	2,338,497
SOH/AGL Deduction	43,352
ASSESSED VALUE	2,295,145
TOTAL EXEMPTION VALUE	0
BASE TAXABLE VALUE	2,295,145
TOTAL JUST VALUE	2,338,497
NCON VALUE	0
INCOME VALUE	
PREVIOUS YEAR MKT VALUE	2,086,495

PERMIT NUM	DESCRIPTION	AMT	ISSUED
20222518	REMODEL	130,000	10/28/2022
20142524	FOP/DCK	2,000	11/26/2014
20141331	REPAIR/RRF	26,000	06/20/2014
2002923	MOVE WATER HEATER	0	05/11/2000
2002893	ELEC. REMODEL	0	05/09/2000
991417	REMODEL/ADD ENTRA	0	10/21/1999

SALES DATA

OFF RECORD Number	DATE	TYPE INST	Q / U	V / I	RSN CD	SALE PRICE
2485/0965	8/05/2021	WD	Q	I	01	2,350,000
GRANTOR: ROGERS THERON L						
GRANTEE: 78 SHERIDAN ATLANTA						
1895/1763	12/30/2013	WD	Q	I	01	805,000
GRANTOR: MORSELLO ROSEMARIE						
GRANTEE: ROGERS THERON L						

BUILDING NOTES

EXTRA FEATURES

LN	OB/XF CODE	DESCRIPTION	BLD	CAP	L	W	UNITS	UT	Adj R	ADJ UNIT PRICE	ORIG COND	YEAR ON	YEAR ACTUAL	Q	% COND	OB/XF MKT VALUE	NOTES
1	0810	CONCRETE A	0	0	54	22	1,188.00	SF	6.50	6.50	100	1970	1970	3	20	1,544	
2	0810	CONCRETE A	0	0	33	11	363.00	SF	6.50	6.50	100	1988	1988	3	52	1,227	
3	1242	WD DECK A	0	0	14	4	56.00	SF	10.00	10.00	100	2000	2000	3	20	112	
4	0416	DUNEWALKS	0	0	0	0	480.00	SF	30.00	30.00	100	2024	2023		97	13,968	

BUILDING DIMENSIONS

FUS=[YR=1993;ORIG=0,-60] E24 E28 D14L0 D9R0 W10 W42 N24 $
BAS=[YR=1993;ORIG=-18,-26] U9.1L0 U14.11R0 W30 S24 E30 $
UGR=[YR=1993;ORIG=-48,-50] W22 S24 E22 N24 $
FOP=[YR=2014;ORIG=24,-60] N12 E28 S12 W28 $
BAS=[YR=2005;ORIG=-43,-20] E15 N6 W15 S6 $
BAS=[YR=2005;ORIG=42,-36] S6 W15 N6 E15 $
FOP=[YR=2005;ORIG=-48,-26] S6 E5 N6 W5 $
FOP=[YR=2005;ORIG=27,-30] W5 N6 E5 S6 $
PTR=[ORIG=0,0] N60 S60 $
UOP=[YR=2024;ORIG=-18,-62] E10 S27 W10 N15 N12 $
UOP=[YR=2024;ORIG=-70,-62] E52 S12 W30 W22 N12 $
BAL=[YR=2024;ORIG=24,-72] W24 S12 E24 N12 $

LAND DESCRIPTION

TOTAL OB/XF 16,851

LN	USE CODE	CLS	LAND USE DESCRIPTION	CAP	RD	LOC ZONE	FRONT	DEPTH	TOT LND UTS	UNIT TYPE	DT	DPTH FACT	% COND	TOT ADJ	UNIT PRICE	ADJ UNIT PRICE	LAND VALUE	OTHER ADJUSTMENTS AND NOTES	YEAR	DENSITY	DECL	FRZ	YR	CONSRV
1	000120	C	RES OCEAN	0	0006	R-1	90.00	150.00	90.00	FF		1.00	1.00	1.00	19,000.00	19,000.00	1,710,000							

REVIEW DATE 02/13/2024 BY DJ Total Acres: 0.00 Total Land Value: 1,710,000 Market: 0 Agricultural: 0 Common: 1,710,000 PRINTED 07/30/2025 BY SYS