LOT 8
LIGHTHOUSE LANE SUB PB 4/45

NASH WILLIAM A
316 LIGHTHOUSE LN
FERNANDINA BEACH, FL 32034

2025

00-00-31-1445-0008-0000

NASSAU COUNTY PROPERTY

BUILDING CHARACTERISTICS

ELEMENT	CD	CONSTRUCTION
Exterior Wall	14	WD SHINGLE 60
Exterior Wall	16	WD FR STUC 40
Roof Structur	03	GABLE/HIP 100
Roof Cover	03	COMP SHNGL 100
Interior Wall	05	DRYWALL 80
Interior Wall	08	DECORATIVE 20
Interior Floo	14	CARPET 90
Interior Floo	15	HARDTILE 10
Air Condition	03	CENTRAL 100
Heating Type	04	AIR DUCTED 100
Bedrooms		3 100
Bathrooms		3.5 100
Frame	02	WOOD FRAME 100
Stories	1.5	1.5 100
Units		0 100
BUD8 Adjustme	02	DIST FB 100
Occupancy	00	NONE 100
Quality	05	Quality Level 05
DOR CODE	0100	SINGLE FAMILY
MAP NUM		MKT AREA 01
NEIGHBORHOOD/LOC	1007.00	

AREA TYPE	TOTAL GROSS AREA	PCT OF BASE	YEAR	TOT ADJ AREA	SUBAREA MARKET VALUE
BAS	815	100	1993	815	113,870
BAS	416	100	2004	416	58,122
FGR	529	55	1993	291	40,658
FOP	49	30	1993	15	2,096
FUS	756	100	1993	756	105,626
SFB	285	80	1993	228	31,856
TOTALS	2,850			2,521	352,228

MARKET ADJUSTMENTS

TYPE	MDL	EFF. AREA	TOT ADJ PTS	EFF. BASE RATE	REPL. COST NEW	AYB	EYB	ECON	FNCT		NORM	% COND
0900	01	2,521	120.2784	158.77	400,259	1982	2000	0	0	0	12.00	88.00

1 SNGL FAM – 100% - 2022 Heated Area: 2215 HX Base Yr 2022

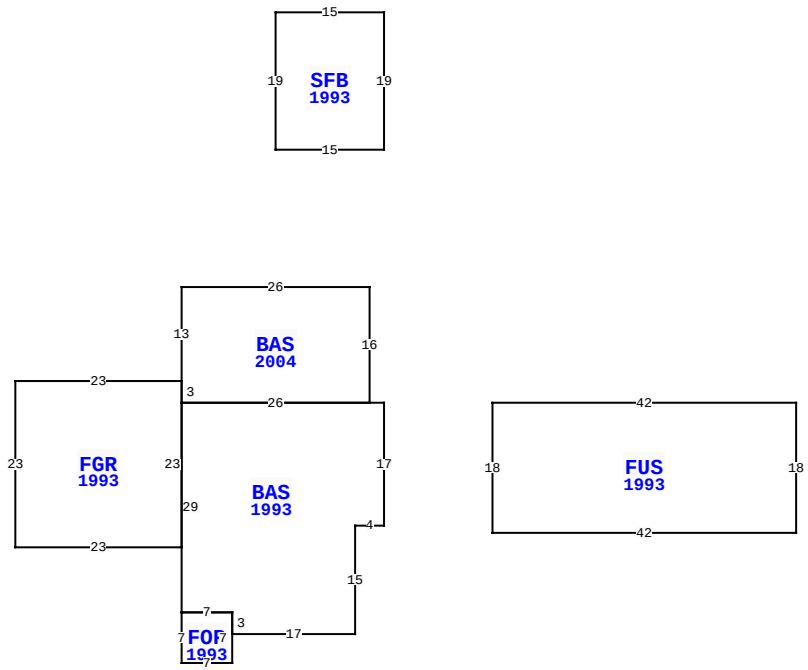

316 LIGHTHOUSE LN, FERNANDINA BEACH

BLD DATE		LGL DATE	
XF DATE		LAND DATE	05/08/2025 MLU
INC DATE		AG DATE	

VALUATION SUMMARY

VALUATION BY		STANDARD
Tax Group: 2	Tax Dist:	
BUILDING MARKET VALUE		352,228
TOTAL MARKET OB/XF VALUE		2,251
TOTAL LAND VALUE - MARKET		225,000
TOTAL MARKET VALUE		579,479
SOH/AGL Deduction		64,838
ASSESSED VALUE		514,641
TOTAL EXEMPTION VALUE	HX HB	50,722
BASE TAXABLE VALUE		463,919
TOTAL JUST VALUE		579,479
NCON VALUE		0
INCOME VALUE		
PREVIOUS YEAR MKT VALUE		562,851

PERMIT NUM	DESCRIPTION	AMT	ISSUED
20090555	REPAIR/RRF	1,981	05/05/2009
20053111	REMODEL	2,000	12/05/2005
20033465	H/AC	3,000	07/11/2003
20033457	REMODEL	1,000	07/10/2003
20033449	REMODEL	2,000	07/09/2003
20033191	ADDITION	38,000	06/03/2003

SALES DATA

OFF RECORD Number	DATE	TYPE INST	Q U	V I	RSN CD	SALE PRICE
2448/1485	3/30/2021	WD	Q	I	01	600,000
GRANTOR: MCFADYEN KAREN A						
GRANTEE: NASH WILLIAM A						
0653/0481	3/30/1992	WD	Q	I		112,500
GRANTOR: BOOTH WM & NANCY						
GRANTEE: MCFADYEN DONALD & K						

BUILDING NOTES

BUILDING DIMENSIONS

BAS=[YR=1993] W2 BAS=[YR=2004] N16 W26 S13 FGR=[YR=1993] W23 S23 E23 N23 $ S3 E26 $ W26 S29 FOP=[YR=1993] S7 E7 N7 W7 $ E7 S3 E17 N15 E4 N17 $ PTR= E15 FUS=[YR=1993] E42 S18 W42 N18 $ W15 $ PTR= N35 SFB=[YR=1993] N19 W15 S19 E15 $ S35 $.

EXTRA FEATURES

LN	OB/XF CODE	DESCRIPTION	BLD	CAP	L	W	UNITS	UT	Adj R	ADJ UNIT PRICE	ORIG COND	YEAR ON	YEAR ACTUAL	Q	% COND	OB/XF MKT VALUE	NOTES
1	0810	CONCRETE A	0	100	0	0	540.00	SF	6.50	6.50	100	1982	1982	3	35	1,229	
2	0504	FP-ELECTRI	0	100	0	0	1.00	UT	2,000.00	2,000.00	100	1982	1982	3	49	980	
3	1242	WD DECK A	0	100	4	5	20.00	SF	10.00	10.00	100	2004	2004	3	21	42	

LAND DESCRIPTION

TOTAL OB/XF 2,251

LN	USE CODE	CLS	LAND USE DESCRIPTION	CAP	RD	LOC ZONE	FRONT	DEPTH	TOT LND UTS	UNIT TYPE	DT	DPTH FACT	% COND	TOT ADJ	UNIT PRICE	ADJ UNIT PRICE	LAND VALUE	OTHER ADJUSTMENTS AND NOTES	YEAR	DENSITY	DECL	FRZ	YR	CONSRV
1	000100	C	RES	100		R-1	97.00	120.00	1.00	LT		1.00	1.00	1.00	225,000.00	225,000.00	225,000							

REVIEW DATE 05/12/2019 BY KBA Total Acres: 0.00 Total Land Value: 225,000 Market: 0 Agricultural: 0 Common: 225,000 PRINTED 07/30/2025 BY SYS