PT OF LOTS 6 & 7
PT OR 2079/1597 BEING PARCEL 1
LIGHTHOUSE CIRCLE SUB PB 3/49

SAVOLDI MARIA JO TRUSTEE OF
213 LIGHTHOUSE CIR
FERNANDINA BEACH, FL 32034

2025

00-00-31-1420-0006-0010

NASSAU COUNTY PROPERTY

BUILDING CHARACTERISTICS

ELEMENT	CD	CONSTRUCTION
Exterior Wall	10	ABOVE AVG 70
Exterior Wall	16	WD FR STUC 30
Roof Structur	08	IRREGULAR 100
Roof Cover	03	COMP SHNGL 100
Interior Wall	05	DRYWALL 100
Interior Floo	12	HARDWOOD 70
Interior Floo	11	CLAY TILE 30
Air Condition	03	CENTRAL 100
Heating Type	04	AIR DUCTED 100
Bedrooms		4 100
Bathrooms		5.5 100
Frame	02	WOOD FRAME 100
Stories	3.	3. 100
Units		0 100
Quality	03	Quality Level 03
DOR CODE	0100	SINGLE FAMILY
MAP NUM		MKT AREA 01
NEIGHBORHOOD/LOC	1007.00	

AREA TYPE	TOTAL GROSS AREA	PCT OF BASE	YEAR	TOT ADJ AREA	SUBAREA MARKET VALUE
BAS	1,496	100	2018	1,496	325,933
FGR	529	55	2018	291	63,400
FGR	828	55	2018	455	99,131
FOP	168	30	2018	50	10,893
FOP	168	30	2018	50	10,893
FOP	240	30	2018	72	15,687
FOP	618	30	2018	185	40,306
FOP	860	30	2018	258	56,210
FST	120	55	2018	66	14,380
FUS	1,118	100	2018	1,118	243,577
TOTALS	9,184			6,853	1,493,058

MARKET ADJUSTMENTS

TYPE	MDL	EFF. AREA	TOT ADJ PTS	EFF. BASE RATE	REPL. COST NEW	AYB	EYB	ECON	FNCT		NORM	% COND
0500	11	6,853	141.6431	223.80	1,533,701	2018	2018	0	0	0	2.65	97.35

1 SFR CUST – 100% - 2019 Heated Area: 5369 HX Base Yr 2019

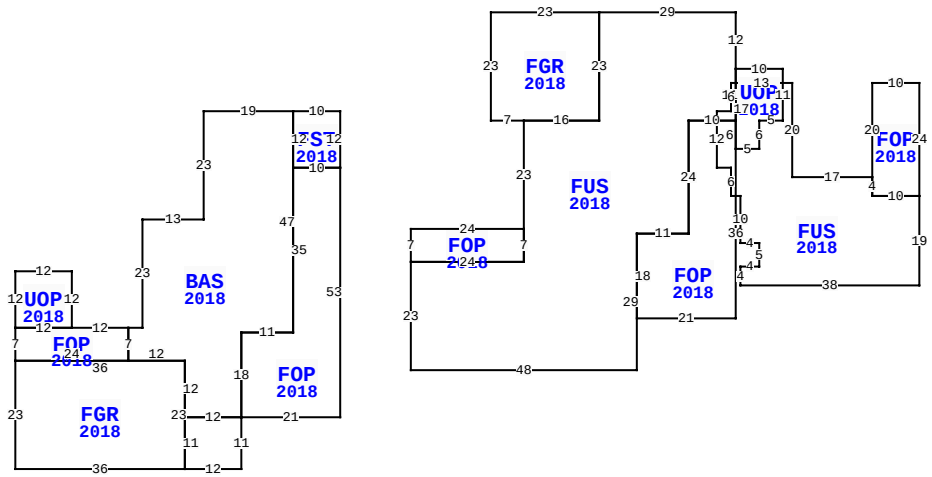

** This building has 13 Sub-Areas

213 LIGHTHOUSE CR, FERNANDINA BEACH

BLD DATE		LGL DATE	
XF DATE		LAND DATE	03/18/2024 MLU
INC DATE		AG DATE	

NASSAU COUNTY PROPERTY — VALUATION SUMMARY

VALUATION BY		STANDARD
Tax Group: 2	Tax Dist:	
BUILDING MARKET VALUE		1,493,058
TOTAL MARKET OB/XF VALUE		197,179
TOTAL LAND VALUE - MARKET		1,245,300
TOTAL MARKET VALUE		2,935,537
SOH/AGL Deduction		891,924
ASSESSED VALUE		2,043,613
TOTAL EXEMPTION VALUE	HX HB	50,722
BASE TAXABLE VALUE		1,992,891
TOTAL JUST VALUE		2,935,537
NCON VALUE		0
INCOME VALUE		
PREVIOUS YEAR MKT VALUE		2,871,131

PERMIT NUM	DESCRIPTION	AMT	ISSUED
20222145	ADDITION	0	06/28/2022
20171593	SWIM POOL	80,000	05/24/2017
20161051	NEW CONSTR	709,367	04/14/2016

SALES DATA

OFF RECORD Number	DATE	TYPE INST	Q / U	V / I	RSN CD	SALE PRICE
2079/1597	6/22/2016	SW	U	V	11	100
GRANTOR: SAVOLDI MARIA JO						
GRANTEE: MARIA JO SAVOLDI LI						
1965/0138	2/27/2015	WD	Q	V	05	755,000
GRANTOR: TEUTSCH M R & JANE R						
GRANTEE: SAVOLDI MARIA JO						

BUILDING NOTES

BUILDING DIMENSIONS

FST=[YR=2018] W10 BAS=[YR=2018] W19 S23 W13 S23 W3
FOP=[YR=2018] W12UOP=[YR=2018] N12W12S12E12$ W12S7
FGR=[YR=2018] S23E36FOP=[YR=2018] E12N11E21N53W10
S35W11S18W12S11$N23W36$ E24N7$ S7E12S12E12N18E11N47$S12E10N12
$ PTR=E15 S25 FOP=[YR=2018] E24 FUS=[YR=2018] N23
FGR=[YR=2018] W7N23E23 S23W16$ E16N23E29S12 UOP=[YR=2018]
E10 S11 W5 S6 W5 FOP=[YR=2018] S36
W21N18E11N24E10S6$N17$S11W10 S24W11 S29W48N23E24N7$ S7W24N7 $
W15 N25$ PTR=E80 FUS=[YR=2018] E3 N6E13 S20E17 FOP=[YR=2018]
N20E10S24 W10N4$S4E10 S19W38N4E4 N5W4N10 W2N6W3N12$ W80$.

EXTRA FEATURES

LN	OB/XF CODE	DESCRIPTION	BLD	CAP	L	W	UNITS	UT	Adj R	ADJ UNIT PRICE	ORIG COND	YEAR ON	YEAR ACTUAL	Q	% COND	OB/XF MKT VALUE	NOTES
1	0855	CONC PAVER	0	100	0	0	5,437.00	SF	7.00	7.00	100	2018	2018	3	97	36,917	
2	0855	CONC PAVER	0	100	0	0	195.00	SF	10.00	10.00	100	2018	2018	3	97	1,892	
3	0810	CONCRETE A	0	100	0	0	364.00	SF	6.50	6.50	100	2018	2018	3	97	2,295	
4	0861	POOL GUNIT	0	100	0	0	580.00	SF	106.25	106.25	100	2018	2018	3	84	51,765	
5	0830	FLAGSTONE	0	100	0	0	1,316.00	SF	12.00	12.00	100	2018	2018	3	97	15,318	
6	0871	POOL HTR R	0	100	0	0	1.00	UT	2,000.00	2,000.00	100	2018	2018	3	78	1,560	
7	0462	ST/AL FNC	0	100	0	0	1,830.00	SF	10.00	10.00	100	2018	2018	3	84	15,372	
8	0409	ELEVATOR R	0	100	0	0	1.00	UT	10,200.00	10,200.00	100	2018	2018	3	100	10,200	
9	1242	WD DECK A	0	100	0	0	850.00	SF	10.00	10.00	100	2024	2023		97	8,245	
10	0300	BOAT DCK W	0	100	0	0	895.00	SF	40.00	40.00	100	2024	2023		98	35,084	

TOTAL OB/XF 178,648

LAND DESCRIPTION

LN	USE CODE	CLS	LAND USE DESCRIPTION	CAP	RD	LOC ZONE	FRONT	DEPTH	TOT LND UTS	UNIT TYPE	DT	DPTH FACT	% COND	TOT ADJ	UNIT PRICE	ADJ UNIT PRICE	LAND VALUE	OTHER ADJUSTMENTS AND NOTES	YEAR	DENSITY	DECL	FRZ	YR	CONSRV
1	000131	C	RES CREEK	100		R-1	0.00	0.00	75.00	FF		1.00	1.00	1.00	6,500.00	6,500.00	487,500							
2	000131	C	RES CREEK	100		R-1	0.00	0.00	421.00	FF		1.00	1.00	0.30	6,000.00	1,800.00	757,800							

REVIEW DATE 12/12/2023 BY TWX Total Acres: 0.00 Total Land Value: 1,245,300 Market: 0 Agricultural: 0 Common: 1,245,300 PRINTED 07/30/2025 BY SYS

PT OF LOTS 6 & 7
PT OR 2079/1597 BEING PARCEL 1
LIGHTHOUSE CIRCLE SUB PB 3/49

SAVOLDI MARIA JO TRUSTEE OF
213 LIGHTHOUSE CIR
FERNANDINA BEACH, FL 32034

2025

00-00-31-1420-0006-0010

NASSAU COUNTY PROPERTY

BUILDING CHARACTERISTICS

ELEMENT	CD	CONSTRUCTION

DOR CODE	0100	SINGLE FAMILY	
MAP NUM		MKT AREA	01
NEIGHBORHOOD/LOC	1007.00		

AREA TYPE	TOTAL GROSS AREA	PCT OF BASE	YEAR	TOT ADJ AREA	SUBAREA MARKET VALUE
TOTALS					

MARKET ADJUSTMENTS

TYPE	MDL	EFF. AREA	TOT ADJ PTS	EFF. BASE RATE	REPL. COST NEW	AYB	EYB	ECON	FNCT		NORM	% COND

VALUATION SUMMARY

VALUATION BY		STANDARD
Tax Group: 2	Tax Dist:	
BUILDING MARKET VALUE		1,493,058
TOTAL MARKET OB/XF VALUE		197,179
TOTAL LAND VALUE - MARKET		1,245,300
TOTAL MARKET VALUE		2,935,537
SOH/AGL Deduction		891,924
ASSESSED VALUE		2,043,613
TOTAL EXEMPTION VALUE	HX HB	50,722
BASE TAXABLE VALUE		1,992,891
TOTAL JUST VALUE		2,935,537
NCON VALUE		0
INCOME VALUE		
PREVIOUS YEAR MKT VALUE		2,871,131

PERMIT NUM	DESCRIPTION	AMT	ISSUED

SALES DATA

OFF RECORD Number	DATE	TYPE INST	Q / U	V / I	RSN CD	SALE PRICE
2079/1597	6/22/2016	SW	U	V	11	100
GRANTOR: SAVOLDI MARIA JO						
GRANTEE: MARIA JO SAVOLDI LI						
1965/0138	2/27/2015	WD	Q	V	05	755,000
GRANTOR: TEUTSCH M R & JANE R						
GRANTEE: SAVOLDI MARIA JO						

BLD DATE		LGL DATE	
XF DATE		LAND DATE	03/18/2024 MLU
INC DATE		AG DATE	

BUILDING NOTES

BUILDING DIMENSIONS

EXTRA FEATURES

LN	OB/XF CODE	DESCRIPTION	BLD	CAP	L	W	UNITS	UT	Adj R	ADJ UNIT PRICE	ORIG COND	YEAR ON	YEAR ACTUAL	Q	% COND	OB/XF MKT VALUE	NOTES
11	0350	CARPORT WD	0	100	20	14	280.00	SF	13.00	13.00	100	2024	2023		97	3,531	
12	0350	CARPORT WD	0	100	35	14	490.00	SF	13.00	13.00	100	2024	2023		97	6,179	
13	0317	DCK PLNG W	0	100	0	0	2.00	UT	1,000.00	1,000.00	100	2024	2023		97	1,940	
14	0310	AL GANG WY	0	100	0	0	16.00	LF	115.00	115.00	100	2024	2023		97	1,785	
15	0303	FLT DOCK W	0	100	20	10	200.00	SF	26.00	26.00	100	2024	2023		98	5,096	

LAND DESCRIPTION

TOTAL OB/XF 18,531

LN	USE CODE	CLS	LAND USE DESCRIPTION	CAP	RD	LOC ZONE	FRONT	DEPTH	TOT LND UTS	UNIT TYPE	DT	DPTH FACT	% COND	TOT ADJ	UNIT PRICE	ADJ UNIT PRICE	LAND VALUE	OTHER ADJUSTMENTS AND NOTES	YEAR	DENSITY	DECL	FRZ	YR	CONSRV

REVIEW DATE 12/12/2023 BY TWX Total Acres: 0.00 Total Land Value: 1,245,300 Market: 0 Agricultural: 0 Common: 1,245,300 PRINTED 07/30/2025 BY SYS