LOT 3
IN OR 788/1452
LIGHTHOUSE CIRCLE SUB PB 3/49

STEGER SUSAN H
205 LIGHTHOUSE CR
FERNANDINA BEACH, FL 32034

2025

00-00-31-1420-0003-0000

BUILDING CHARACTERISTICS

ELEMENT	CD	CONSTRUCTION
Exterior Wall	14	WD SHINGLE 100
Roof Structur	08	IRREGULAR 100
Roof Cover	03	COMP SHNGL 100
Interior Wall	05	DRYWALL 50
Interior Wall	08	DECORATIVE 50
Interior Floo	12	HARDWOOD 100
Air Condition	03	CENTRAL 100
Heating Type	04	AIR DUCTED 100
Bedrooms		3 100
Bathrooms		3.5 100
Frame	02	WOOD FRAME 100
Stories	2.	2. 100
Units		0 100
Occupancy	00	NONE 100
Quality	04	Quality Level 04
DOR CODE	0100	SINGLE FAMILY
MAP NUM		MKT AREA 01
NEIGHBORHOOD/LOC	1007.00	

AREA TYPE	TOTAL GROSS AREA	PCT OF BASE	YEAR	TOT ADJ AREA	SUBAREA MARKET VALUE
BAS	2,216	100	1998	2,216	284,985
FGR	624	55	1998	343	44,111
FOP	84	30	1998	25	3,216
FOP	354	30	1998	106	13,632
FUS	1,122	100	1998	1,122	144,293
TOTALS	4,400			3,812	490,236

MARKET ADJUSTMENTS

TYPE	MDL	EFF. AREA	TOT ADJ PTS	EFF. BASE RATE	REPL. COST NEW	AYB	EYB	ECON	FNCT		NORM	% COND
0900	01	3,812	111.9825	147.82	563,490	1998	1998	0	0	0	13.00	87.00

1 SNGL FAM – 100% - 1999 Heated Area: 3338 HX Base Yr 1999

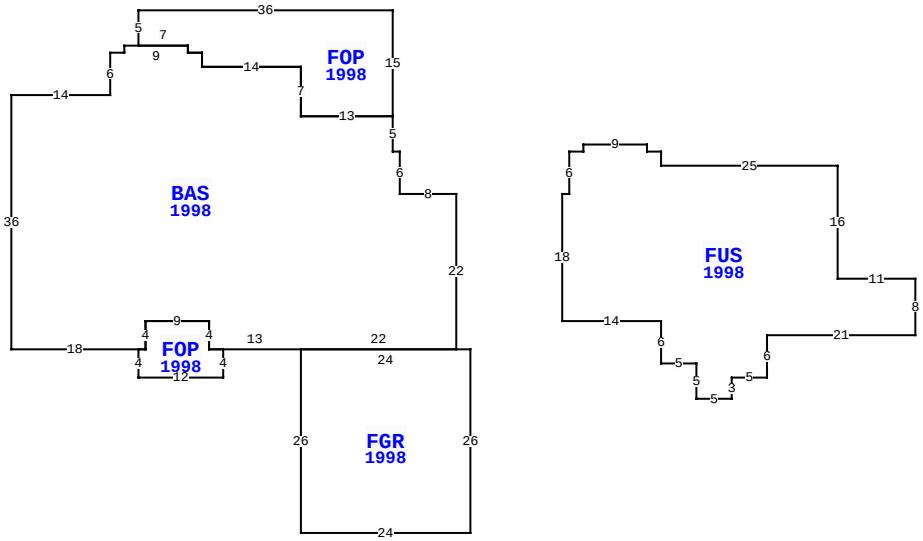

205 LIGHTHOUSE CIR, FERNANDINA BEACH

BLD DATE		LGL DATE	
XF DATE		LAND DATE	03/18/2024 MLU
INC DATE		AG DATE	

NASSAU COUNTY PROPERTY

PAGE 1 of 1 2

VALUATION SUMMARY

VALUATION BY		STANDARD
Tax Group: 2	Tax Dist:	
BUILDING MARKET VALUE		490,236
TOTAL MARKET OB/XF VALUE		20,832
TOTAL LAND VALUE - MARKET		650,000
TOTAL MARKET VALUE		1,161,068
SOH/AGL Deduction		644,355
ASSESSED VALUE		516,713
TOTAL EXEMPTION VALUE	HX HB	50,722
BASE TAXABLE VALUE		465,991
TOTAL JUST VALUE		1,161,068
NCON VALUE		0
INCOME VALUE		
PREVIOUS YEAR MKT VALUE		1,139,093

PERMIT NUM	DESCRIPTION	AMT	ISSUED
10654B	NEW CONSTR	250,000	08/18/1997

SALES DATA

OFF RECORD Number	DATE	TYPE INST	Q / U	V / I	RSN CD	SALE PRICE
0788/1452	3/31/1997	WD	Q	V		94,000

GRANTOR: HARDEE SUZANNE D

GRANTEE: STEGER SUSAN H

BUILDING NOTES

BUILDING DIMENSIONS

BAS=[YR=1998] W8 N6 W1 N5 FOP=[YR=1998] N15 W36 S5 E7 S1 E2 S2 E14 S7 E13 $ W13 N7 W14 N2 W2 N1 W9 S1 W2 S6 W14 S36 E18
FOP=[YR=1998] S4 E12 N4 W2 N4 W9 S4 W1 $ E1 N4 E9 S4 E13
FGR=[YR=1998] S26 E24 N26 W24 $ E22 N22 $ PTR= E15
FUS=[YR=1998] E1 N6 E2 N1 E9 S1 E2 S2 E25 S16 E11 S8 W21 S6 W5 S3 W5 N5 W5 N6 W14 N18 $ W15 $.

EXTRA FEATURES

LN	OB/XF CODE	DESCRIPTION	BLD	CAP	L	W	UNITS	UT	Adj R	ADJ UNIT PRICE	ORIG COND	YEAR ON	YEAR ACTUAL	Q	% COND	OB/XF MKT VALUE	NOTES
1	0500	FP-PRE FAB	0	100	0	0	1.00	UT	3,500.00	3,500.00	100	1998	1998	3	80	2,800	
2	0819	CONC 12"	0	100	4	6	24.00	SF	9.50	9.50	100	1998	1998	3	73	166	
3	0810	CONCRETE A	0	100	0	0	2,193.00	SF	6.50	6.50	100	1998	1998	3	73	10,406	
4	0300	BOAT DCK W	0	100	4	149	596.00	SF	40.00	40.00	100	1995	1995	3	20	4,768	
5	0300	BOAT DCK W	0	100	16	10	160.00	SF	40.00	40.00	100	1995	1995	3	20	1,280	
6	0311	WD GANG WY	0	100	0	0	20.00	SF	45.00	45.00	100	1995	1995	3	20	180	
7	0303	FLT DOCK W	0	100	8	20	160.00	SF	26.00	26.00	100	1995	1995	3	20	832	
8	0317	DCK PLNG W	0	100	0	0	2.00	UT	1,000.00	1,000.00	100	1995	1995	3	20	400	

LAND DESCRIPTION

TOTAL OB/XF 20,832

LN	USE CODE	CLS	LAND USE DESCRIPTION	CAP	RD	LOC ZONE	FRONT	DEPTH	TOT LND UTS	UNIT TYPE	DT	DPTH FACT	% COND	TOT ADJ	UNIT PRICE	ADJ UNIT PRICE	LAND VALUE	OTHER ADJUSTMENTS AND NOTES	YEAR	DENSITY	DECL	FRZ	YR	CONSRV
1	000131	C	RES CREEK	100		R-1	100.00	290.00	100.00	FF		1.00	1.00	1.00	6,500.00	6,500.00	650,000							

REVIEW DATE 05/12/2019 BY KBA Total Acres: 0.00 Total Land Value: 650,000 Market: 0 Agricultural: 0 Common: 650,000 PRINTED 07/30/2025 BY SYS