BLOCK 7 N1/2 OF LOT 3
IN OR 1842/1584
INTERLACHEN BY THE SEA PB 5/21

WINNER CARL & CAROL
1533 N FLETCHER AV
FERNANDINA BEACH, FL 32034

2025

00-00-31-1400-0007-0031

NASSAU COUNTY PROPERTY

BUILDING CHARACTERISTICS

ELEMENT	CD	CONSTRUCTION
Exterior Wall	10	ABOVE AVG 50
Exterior Wall	17	CB STUCCO 50
Roof Structur	03	GABLE/HIP 100
Roof Cover	12	MODULAR MT 100
Interior Wall	05	DRYWALL 100
Interior Floo	12	HARDWOOD 80
Interior Floo	11	CLAY TILE 20
Air Condition	03	CENTRAL 100
Heating Type	04	AIR DUCTED 100
Bedrooms		3 100
Bathrooms		2 100
Frame	03	MASONRY 100
Stories	3.	3. 100
Units		0 100
Occupancy	00	NONE 100
Quality	05	Quality Level 05
DOR CODE	0100	SINGLE FAMILY
MAP NUM		MKT AREA 01
NEIGHBORHOOD/LOC	1056.00	

AREA TYPE	TOTAL GROSS AREA	PCT OF BASE	YEAR	TOT ADJ AREA	SUBAREA MARKET VALUE
BAL	72	15	2014	11	1,837
BAS	78	100	2014	78	13,027
BAS	80	100	2014	80	13,362
BAS	1,464	100	2014	1,464	244,518
FGR	1,144	55	2014	629	105,056
FOP	78	30	2014	23	3,841
FOP	104	30	2014	31	5,178
FOP	220	30	2014	66	11,023
FST	36	55	2014	20	3,340
FST	36	55	2014	20	3,340
TOTALS	5,130			3,754	626,996

MARKET ADJUSTMENTS

TYPE	MDL	EFF. AREA	TOT ADJ PTS	EFF. BASE RATE	REPL. COST NEW	AYB	EYB	ECON	FNCT		NORM	% COND
0500	01	3,754	110.9790	175.35	658,264	2014	2014	0	0	0	4.75	95.25

1 SFR CUST – 100% - 2016 Heated Area: 2911 HX Base Yr 2016

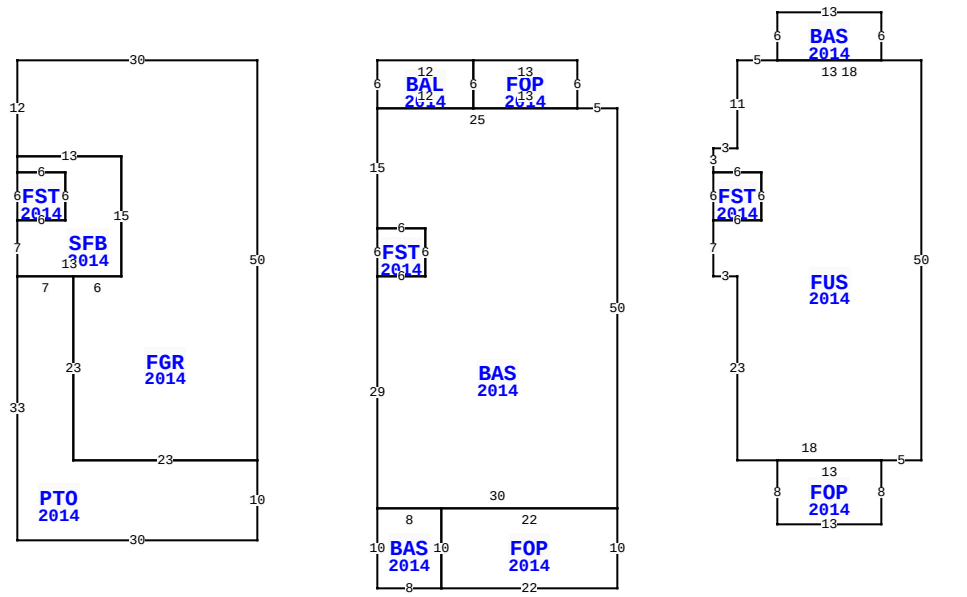

** This building has 14 Sub-Areas

1533 N FLETCHER AVE, FERNANDINA BEACH

BLD DATE		LGL DATE	
XF DATE		LAND DATE	05/07/2025 MLU
INC DATE		AG DATE	

VALUATION SUMMARY

VALUATION BY		STANDARD
Tax Group: 2	Tax Dist:	
BUILDING MARKET VALUE		626,996
TOTAL MARKET OB/XF VALUE		11,455
TOTAL LAND VALUE - MARKET		950,000
TOTAL MARKET VALUE		1,588,451
SOH/AGL Deduction		921,673
ASSESSED VALUE		666,778
TOTAL EXEMPTION VALUE	HX HB	50,722
BASE TAXABLE VALUE		616,056
TOTAL JUST VALUE		1,588,451
NCON VALUE		0
INCOME VALUE		
PREVIOUS YEAR MKT VALUE		1,409,840

PERMIT NUM	DESCRIPTION	AMT	ISSUED
20141873	MTLROOF	20,000	08/26/2014
20140852	NEW CONSTR	550,000	04/30/2014

SALES DATA

OFF RECORD Number	DATE	TYPE INST	Q / U	V / I	RSN CD	SALE PRICE
1842/1584	2/28/2013	WD	Q	V	02	230,000
GRANTOR: ELDRIDGE FRANK S III						
GRANTEE: WINNER CARL & CAROL						
1545/1427	1/10/2008	WD	U	V	21	100
GRANTOR: ELDRIDGE LELAND V ETA						
GRANTEE: ELDRIDGE FRANK S II						

BUILDING NOTES

BUILDING DIMENSIONS

FGR=[YR=2014] W30 S12 SFB=[YR=2014] S2 FST=[YR=2014] S6 E6 N6 W6$ E6S6W6S7 PTO=[YR=2014] S33 E30 N10 W23 N23 W7 $ E13N15 W13$ E13 S15 W6 S23 E23 N50$ PTR=E15 BAL=[YR=2014] E12 FOP=[YR=2014] E13 S6 BAS=[YR=2014] E5 S50 FOP=[YR=2014] S10 W22 BAS=[YR=2014] W8 N10 E8 S10$ N10 E22$ W30 N29 FST=[YR=2014] N6E6S6W6$ E6N6W6 N15 E25$ W13 N6$ S6 W12 N6$ W15$ PTR=E60 FUS=[YR=2014] E5 BAS=[YR=2014] N6 E13 S6 W13$ E18 S50 W5 FOP=[YR=2014] S8 W13 N8 E13$ W18 N23 W3 N7 FST=[YR=2014] N6E6S6W6$ E6N6W6 N3 E3 N11$ W60$.

EXTRA FEATURES

LN	OB/XF CODE	DESCRIPTION	BLD	CAP	L	W	UNITS	UT	Adj R	ADJ UNIT PRICE	ORIG COND	YEAR ON	YEAR ACTUAL	Q	% COND	OB/XF MKT VALUE	NOTES
1	0810	CONCRETE A	0	100	0	0	152.00	SF	6.50	6.50	100	2014	2014	3	94	929	
2	0855	CONC PAVER	0	100	8	7	56.00	SF	10.00	10.00	100	2014	2014	3	94	526	
3	0410	ELEVATOR	0	100	0	0	1.00	UT	10,000.00	10,000.00	100	2014	2014	3	100	10,000	

LAND DESCRIPTION

TOTAL OB/XF 11,455

LN	USE CODE	CLS	LAND USE DESCRIPTION	CAP	RD	LOC ZONE	FRONT	DEPTH	TOT LND UTS	UNIT TYPE	DT	DPTH FACT	% COND	TOT ADJ	UNIT PRICE	ADJ UNIT PRICE	LAND VALUE	OTHER ADJUSTMENTS AND NOTES	YEAR	DENSITY	DECL	FRZ	YR	CONSRV
1	000100	C	RES	100		R-1	50.00	150.00	50.00	FF		1.00	1.00	1.00	19,000.00	19,000.00	950,000							

REVIEW DATE 10/04/2019 BY DJA Total Acres: 0.00 Total Land Value: 950,000 Market: 0 Agricultural: 0 Common: 950,000 PRINTED 07/30/2025 BY SYS