BLOCK 2 LOT 8 &
PT OF LOT 10 (S-1)
(F/K/A PT OF OUTLOT 12)

ESS HARLEY W & PATRICIA D
2939 PARK SQUARE PLACE
FERNANDINA BEACH, FL 32034

2025

00-00-31-1380-0002-0080

NASSAU COUNTY PROPERTY

BUILDING CHARACTERISTICS

ELEMENT	CD	CONSTRUCTION
Exterior Wall	17	CB STUCCO 100
Roof Structur	03	GABLE/HIP 100
Roof Cover	03	COMP SHNGL 80
Roof Cover	01	MINIMUM 20
Interior Wall	03	PLASTER 100
Interior Floo	14	CARPET 80
Interior Floo	08	SHT VINYL 20
Air Condition	03	CENTRAL 100
Heating Type	04	AIR DUCTED 100
Bedrooms		3 100
Bathrooms		1 100
Frame	03	MASONRY 100
Stories	1.	1. 100
Units		0 100
BUD8 Adjustme	02	DIST FB 100
Occupancy	00	NONE 100
Quality	03	Quality Level 03
DOR CODE	0100	SINGLE FAMILY
MAP NUM		MKT AREA 01
NEIGHBORHOOD/LOC	1007.00	

AREA TYPE	TOTAL GROSS AREA	PCT OF BASE	YEAR	TOT ADJ AREA	SUBAREA MARKET VALUE
BAS	1,070	100	1993	1,070	90,006
FCP	332	25	1993	83	6,982
FOP	42	30	1993	13	1,094
FST	68	55	1993	37	3,113
UCP	288	20	1993	58	4,879
UOP	224	20	1993	45	3,785
UST	32	45	1993	14	1,177
UST	80	45	1993	36	3,028
UST	80	45	1993	36	3,028
UST	80	45	1993	36	3,028
TOTALS	2,296			1,428	120,120

MARKET ADJUSTMENTS

TYPE	MDL	EFF. AREA	TOT ADJ PTS	EFF. BASE RATE	REPL. COST NEW	AYB	EYB	ECON	FNCT		NORM	% COND
0100	01	1,428	115.2320	115.23	164,548	1957	1970	0	0	0	27.00	73.00

1 SINGLE FAM – 0% - 0 Heated Area: 1070 HX Base Yr

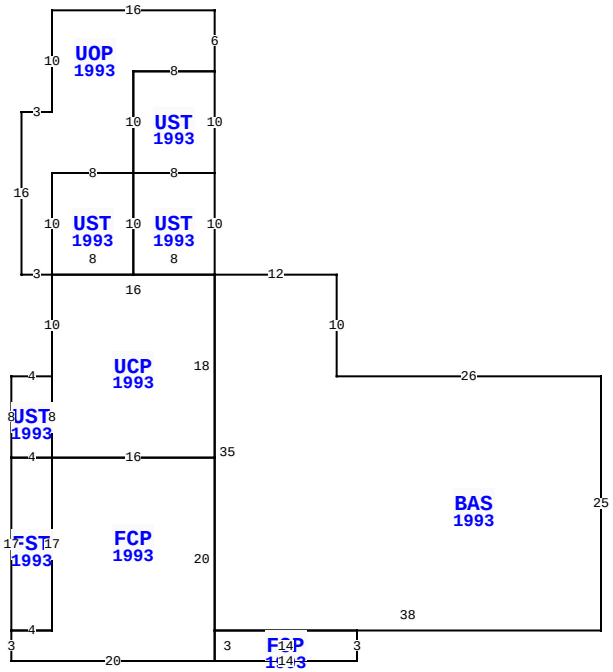

811 AMELIA DR, FERNANDINA BEACH

BLD DATE		LGL DATE	
XF DATE		LAND DATE	05/08/2025 MLU
INC DATE		AG DATE	

VALUATION SUMMARY

VALUATION BY	STANDARD
Tax Group: 2	Tax Dist:
BUILDING MARKET VALUE	120,120
TOTAL MARKET OB/XF VALUE	3,310
TOTAL LAND VALUE - MARKET	225,000
TOTAL MARKET VALUE	348,430
SOH/AGL Deduction	59,671
ASSESSED VALUE	288,759
TOTAL EXEMPTION VALUE	0
BASE TAXABLE VALUE	288,759
TOTAL JUST VALUE	348,430
NCON VALUE	0
INCOME VALUE	
PREVIOUS YEAR MKT VALUE	343,469

PERMIT NUM	DESCRIPTION	AMT	ISSUED
20131187	PAVERS	0	05/28/2013
20100672	XFOB	2,500	04/26/2010
20062109	REMODEL	5,000	09/14/2006
20061884	FOUNDATION	0	08/09/2006
20060038	H/AC	6,500	01/10/2006
20053069	OTHER	8,000	11/22/2005

SALES DATA

OFF RECORD Number	DATE	TYPE INST	Q U	V I	RSN CD	SALE PRICE
1583/0520	9/02/2008	WD	Q	I		143,000
GRANTOR: ROBINSON HARVEY B JR						
GRANTEE: ESS HARLEY W & PATR						
1240/1094	6/24/2004	PR	Q	I	01	100
GRANTOR: ROBINSON HARVEY B JR						
GRANTEE: ROBINSON HARVEY B J						

BUILDING NOTES

BUILDING DIMENSIONS

BAS=[YR=1993] W26 N10 W12 UST=[YR=1993] N10 UST=[YR=1993] N10 UOP=[YR=1993] N6 W16 S10 W3 S16 E3UCP=[YR=1993] S10 UST=[YR=1993] W4 S8 FST=[YR=1993] S17 FCP=[YR=1993] S3 E20 FOP=[YR=1993] E14 N3 W14 S3 $ N20 W16 S17 W4 $ E4 N17 W4 $ E4 N8 $ S8 E16 N18 W16 $ N10 E8 N10 E8 $ W8 S10 E8 $ W8 UST=[YR=1993] W8 S10 E8 N10 $ S10 E8 $ S35 E38 N25 $.

EXTRA FEATURES

L N	OB/XF CODE	DESCRIPTION	BLD	CAP	L	W	UNITS	UT	Adj R	ADJ UNIT PRICE	ORIG COND	YEAR ON	YEAR ACTUAL	Q	% COND	OB/XF MKT VALUE	NOTES
1	0810	CONCRETE A	0	0	47	18	846.00	SF	6.50	6.50	100	1983	1983	3	38	2,090	
2	0810	CONCRETE A	0	0	0	0	494.00	SF	6.50	6.50	100	1983	1983	3	38	1,220	

LAND DESCRIPTION

TOTAL OB/XF 3,310

L N	USE CODE	CLS	LAND USE DESCRIPTION	CAP	R D	LOC ZONE	FRONT	DEPTH	TOT LND UTS	UNIT TYPE	D T	DPTH FACT	% COND	TOT ADJ	UNIT PRICE	ADJ UNIT PRICE	LAND VALUE	OTHER ADJUSTMENTS AND NOTES	YEAR	DENSITY	DECL	FRZ	YR	CONSRV
1	000100	C	RES	0	0006	R-1	82.00	88.00	1.00	LT		1.00	1.00	1.00	225,000.00	225,000.00	225,000							

REVIEW DATE 05/12/2019 BY KBA Total Acres: 0.00 Total Land Value: 225,000 Market: 0 Agricultural: 0 Common: 225,000 PRINTED 07/30/2025 BY SYS