BLOCK 2 LOT 4
IN OR 2012/1245
HIGHLAND HEIGHTS SUB 1 PB 3/43

TARTOF AARON D
803 AMELIA DR
FERNANDINA BEACH, FL 32034

2025

00-00-31-1380-0002-0040

BUILDING CHARACTERISTICS

ELEMENT	CD	CONSTRUCTION
Exterior Wall	20	FACE BRICK 90
Exterior Wall	26	AL SIDING 10
Roof Structur	03	GABLE/HIP 100
Roof Cover	03	COMP SHNGL 100
Interior Wall	03	PLASTER 100
Interior Floo	12	HARDWOOD 80
Interior Floo	07	CORK/VTILE 20
Air Condition	03	CENTRAL 100
Heating Type	04	AIR DUCTED 100
Bedrooms		3 100
Bathrooms		2 100
Frame	02	WOOD FRAME 100
Stories	1.	1. 100
Units		0 100
BUD8 Adjustme	02	DIST FB 100
Occupancy	00	NONE 100
Quality	03	Quality Level 03
DOR CODE	0100	SINGLE FAMILY
MAP NUM		MKT AREA 01
NEIGHBORHOOD/LOC	1007.00	

AREA TYPE	TOTAL GROSS AREA	PCT OF BASE	YEAR	TOT ADJ AREA	SUBAREA MARKET VALUE
BAS	1,583	100	1993	1,583	137,723
FOP	125	30	1993	38	3,306
FOP	42	30	2007	13	1,131
FSP	64	40	2007	26	2,262
FSP	384	40	2007	154	13,398
FST	65	55	1993	36	3,132
FST	65	55	1993	36	3,132
STR	15	10	2007	2	174
STR	15	10	2007	2	174
STR	21	10	2007	2	174
TOTALS	2,379			1,892	164,606

MARKET ADJUSTMENTS

TYPE	MDL	EFF. AREA	TOT ADJ PTS	EFF. BASE RATE	REPL. COST NEW	AYB	EYB	ECON	FNCT		NORM	% COND
0100	01	1,892	114.3660	114.37	216,388	1956	1990	0	0	0	23.93	76.07

1 SINGLE FAM – 100% - 2021 Heated Area: 1583 HX Base Yr 2021

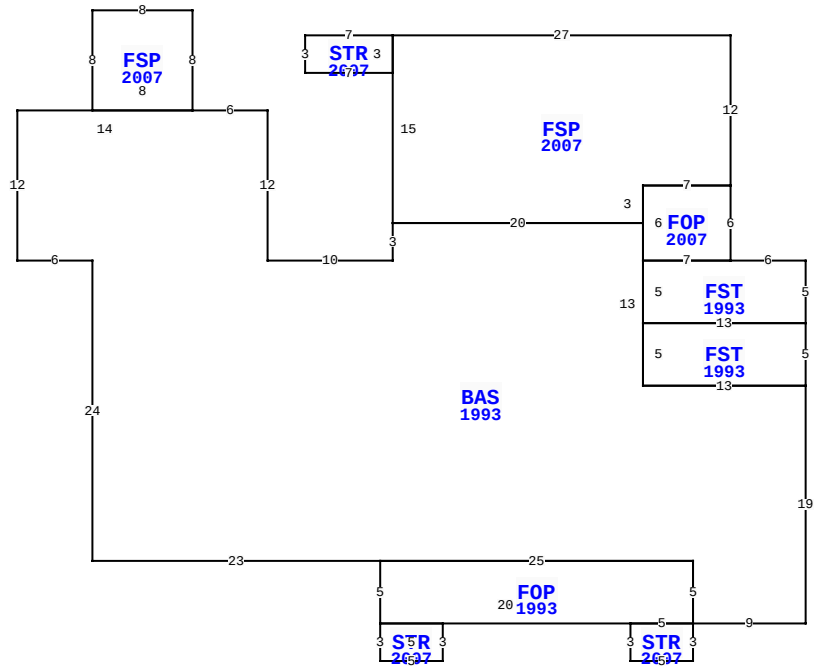

803 AMELIA DR, FERNANDINA BEACH

BLD DATE	03/25/2015 KK	LGL DATE	
XF DATE		LAND DATE	05/08/2025 MLU
INC DATE		AG DATE	

NASSAU COUNTY PROPERTY

PAGE 1 of 1 2

VALUATION SUMMARY

VALUATION BY		STANDARD
Tax Group: 2	Tax Dist:	
BUILDING MARKET VALUE		164,606
TOTAL MARKET OB/XF VALUE		5,596
TOTAL LAND VALUE - MARKET		225,000
TOTAL MARKET VALUE		395,202
SOH/AGL Deduction		113,263
ASSESSED VALUE		281,939
TOTAL EXEMPTION VALUE	HX HB	50,722
BASE TAXABLE VALUE		231,217
TOTAL JUST VALUE		395,202
NCON VALUE		0
INCOME VALUE		
PREVIOUS YEAR MKT VALUE		388,184

PERMIT NUM	DESCRIPTION	AMT	ISSUED

SALES DATA

OFF RECORD Number	DATE	TYPE INST	Q U	V I	RSN CD	SALE PRICE
2012/1245	11/03/2015	WD	U	I	30	211,000
GRANTOR: TARTOF DANA T						
GRANTEE: TARTOF AARON D						
1522/0869	8/30/2007	WD	Q	I		220,000
GRANTOR: PREW MARTHA SUE						
GRANTEE: TARTOF DANA T						

BUILDING NOTES

BUILDING DIMENSIONS

FSP=[YR=2007] W27 STR=[YR=2007] W7 S3 E7 N3$ S15
BAS=[YR=1993] S3 W10 N12 W6 FSP=[YR=2007] N8 W8 S8 E8$ W14
S12 E6 S24 E23 FOP=[YR=1993] S5 STR=[YR=2007] S3 E5 N3 W5$
E20 STR=[YR=2007] S3 E5 N3 W5$ E5 N5 W25$ E25 S5 E9 N19
FST=[YR=1993] N5 FST=[YR=1993] N5 W6 FOP=[YR=2007] N6 W7 S6
E7$ W7 S5 E13 $ W13 S5 E13$ W13 N13 W20$ E20 N3 E7 N12$.

EXTRA FEATURES

LN	OB/XF CODE	DESCRIPTION	BLD	CAP	L	W	UNITS	UT	Adj R	ADJ UNIT PRICE	ORIG COND	YEAR ON	YEAR ACTUAL	Q	% COND	OB/XF MKT VALUE	NOTES
1	0810	CONCRETE A	0	100	0	0	765.00	SF	6.50	6.50	100	1956	1956	3	20	995	
2	0940	SHEDS/PORT	0	100	16	10	160.00	SF	33.00	33.00	100	2004	2004	3	21	1,109	
3	0855	CONC PAVER	0	100	0	0	500.00	SF	7.00	7.00	100	2004	2004	3	83	2,905	
4	0851	PATIO STON	0	100	0	0	250.00	SF	1.50	1.50	100	2004	2004	3	83	311	
5	0479	VF PICKET	0	100	0	0	40.00	LF	10.00	10.00	100	2007	2007	3	69	276	

LAND DESCRIPTION

TOTAL OB/XF 5,596

LN	USE CODE	CLS	LAND USE DESCRIPTION	CAP	RD	LOC ZONE	FRONT	DEPTH	TOT LND UTS	UNIT TYPE	DT	DPTH FACT	% COND	TOT ADJ	UNIT PRICE	ADJ UNIT PRICE	LAND VALUE	OTHER ADJUSTMENTS AND NOTES	YEAR	DENSITY	DECL	FRZ	YR	CONSRV
1	000100	C	RES	100	0006	R-1	85.00	110.00	1.00	LT		1.00	1.00	1.00	225,000.00	225,000.00	225,000							

REVIEW DATE 07/10/2020 BY DJA Total Acres: 0.00 Total Land Value: 225,000 Market: 0 Agricultural: 0 Common: 225,000 PRINTED 07/30/2025 BY SYS