LOT 9
HIGHLAND DUNES PB 7/311

CAWLEY DAVID JR/CAWLEY-COCKERHAM AMBER
1624 HIGHLAND DUNES WAY
FERNANDINA BEACH, FL 32034

2025

00-00-31-1375-0009-0000

NASSAU COUNTY PROPERTY

BUILDING CHARACTERISTICS

ELEMENT	CD	CONSTRUCTION
Exterior Wall	10	ABOVE AVG 50
Exterior Wall	23	REINF CONC 50
Roof Structur	08	IRREGULAR 100
Roof Cover	03	COMP SHNGL 100
Interior Wall	05	DRYWALL 100
Interior Floo	12	HARDWOOD 90
Interior Floo	15	HARDTILE 10
Air Condition	03	CENTRAL 100
Heating Type	04	AIR DUCTED 100
Bedrooms		3 100
Bathrooms		2.5 100
Frame	02	WOOD FRAME 100
Stories	2.	2. 100
Units		0 100
Occupancy	00	NONE 100
Quality	04	Quality Level 04

DOR CODE	0100	SINGLE FAMILY	
MAP NUM		MKT AREA	01
NEIGHBORHOOD/LOC	1104.00		

AREA TYPE	TOTAL GROSS AREA	PCT OF BASE	YEAR	TOT ADJ AREA	SUBAREA MARKET VALUE
BAS	1,986	100	2012	1,986	346,546
FGR	472	55	2012	260	45,368
FOP	132	30	2012	40	6,980
FOP	175	30	2012	52	9,073
FST	32	55	2012	18	3,141
STR	28	10	2012	3	523
UOP	132	20	2012	26	4,537
UST	1,986	45	2012	894	155,998
TOTALS	4,943			3,279	572,167

MARKET ADJUSTMENTS

TYPE	MDL	EFF. AREA	TOT ADJ PTS	EFF. BASE RATE	REPL. COST NEW	AYB	EYB	ECON	FNCT		NORM	% COND
0500	01	3,279	117.1758	185.14	607,074	2012	2012	0	0	0	5.75	94.25

1 SFR CUST – 100% - 2024 Heated Area: 1986 HX Base Yr 2024

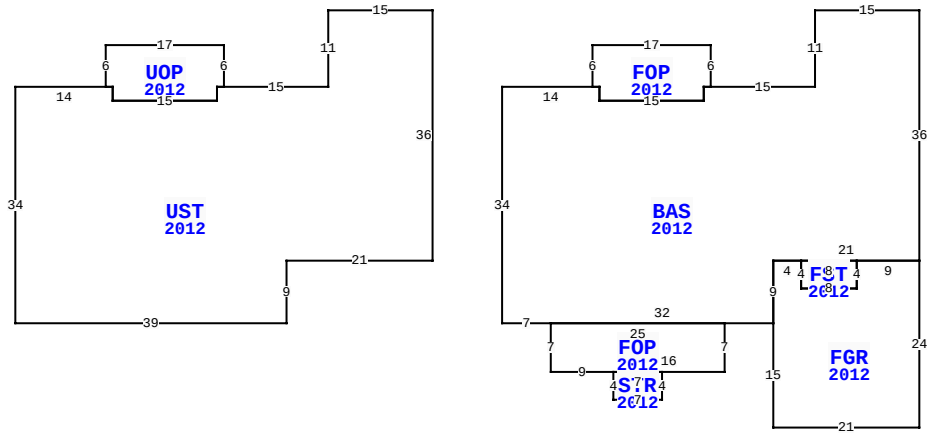

1624 HIGHLAND DUNES WAY, FERNANDINA BEACH

BLD DATE		LGL DATE	
XF DATE		LAND DATE	04/09/2025 MLU
INC DATE		AG DATE	

VALUATION SUMMARY

VALUATION BY		STANDARD
Tax Group: 2	Tax Dist:	
BUILDING MARKET VALUE		572,167
TOTAL MARKET OB/XF VALUE		6,150
TOTAL LAND VALUE - MARKET		235,000
TOTAL MARKET VALUE		813,317
SOH/AGL Deduction		211,477
ASSESSED VALUE		601,840
TOTAL EXEMPTION VALUE	HX HB	50,722
BASE TAXABLE VALUE		551,118
TOTAL JUST VALUE		813,317
NCON VALUE		0
INCOME VALUE		
PREVIOUS YEAR MKT VALUE		752,277

PERMIT NUM	DESCRIPTION	AMT	ISSUED
20120548	NEW CONSTR	239,971	03/22/2012

SALES DATA

OFF RECORD Number	DATE	TYPE INST	Q / U	V / I	RSN CD	SALE PRICE
2397/0707	9/29/2020	WD	Q	I	01	529,900
GRANTOR: BENTON BERT D III & M						
GRANTEE: CAWLEY DAVID JR & A						
1820/1118	10/17/2012	WD	Q	I	02	400,000
GRANTOR: HIGHLAND 35 LLC						
GRANTEE: BENTON BERT DURELL						

BUILDING NOTES

BUILDING DIMENSIONS

UST=[YR=2012] W15S11W15 UOP=[YR=2012] N6 W17S6E1S2E15N2E1$ W1S2W15N2W14 S34E39N9E21N36$ PTR=S11E10 BAS=[YR=2012] S34E7 FOP=[YR=2012] S7E9 STR=[YR=2012] S4E7N4W7$ E16N7W25$ E32 FGR=[YR=2012] S15E21N24 W9 FST=[YR=2012] W8S4E8N4$ S4W8N4W4S9$ N9E21N36W15S11W15 FOP=[YR=2012] N6 W17S6E1S2E15N2E1$ W1S2W15N2W14 $ W10N11$.

EXTRA FEATURES

L N	OB/XF CODE	DESCRIPTION	BLD	CAP	L	W	UNITS	UT	Adj R	ADJ UNIT PRICE	ORIG COND	YEAR ON	YEAR ACTUAL	Q	% COND	OB/XF MKT VALUE	NOTES
1	0855	CONC PAVER	0	100	0	0	830.00	SF	7.00	7.00	100	2012	2012	3	92	5,345	
2	0855	CONC PAVER	0	100	25	5	125.00	SF	7.00	7.00	100	2012	2012	3	92	805	

LAND DESCRIPTION

TOTAL OB/XF 6,150

L N	USE CODE	CLS	LAND USE DESCRIPTION	CAP	R D	LOC ZONE	FRONT	DEPTH	TOT LND UTS	UNIT TYPE	D T	DPTH FACT	% COND	TOT ADJ	UNIT PRICE	ADJ UNIT PRICE	LAND VALUE	OTHER ADJUSTMENTS AND NOTES	YEAR	DENSITY	DECL	FRZ	YR	CONSRV
1	000100	C	RES	100	0003	R-1	0.00	0.00	1.00	LT		1.00	1.00	1.00	235,000.00	235,000.00	235,000							

REVIEW DATE 01/14/2022 BY TW Total Acres: 0.00 Total Land Value: 235,000 Market: 0 Agricultural: 0 Common: 235,000 PRINTED 07/30/2025 BY SYS