LOT 17
IN OR 2206/1013
HAMBYS SUB PB 2/32

REMICK FRANCIS A & LISA S
2120 S FLETCHER AVE
FERNANDINA BEACH, FL 32034

2025

00-00-31-1360-0017-0000

BUILDING CHARACTERISTICS

ELEMENT	CD	CONSTRUCTION
Exterior Wall	10	ABOVE AVG 100
Roof Structur	03	GABLE/HIP 100
Roof Cover	03	COMP SHNGL 100
Interior Wall	05	DRYWALL 100
Interior Floo	13	LVT/LAMNT 100
Air Condition	03	CENTRAL 100
Heating Type	04	AIR DUCTED 100
Bedrooms		3 100
Bathrooms		4 100
Frame	02	WOOD FRAME 100
Stories	3.	3. 100
Units		0 100
Occupancy	00	NONE 100
Quality	04	Quality Level 04
DOR CODE	0100	SINGLE FAMILY
MAP NUM		MKT AREA 01
NEIGHBORHOOD/LOC	1052.00	

AREA TYPE	TOTAL GROSS AREA	PCT OF BASE	YEAR	TOT ADJ AREA	SUBAREA MARKET VALUE
BAL	292	15	2022	44	6,689
BAS	1,380	100	1994	1,380	209,809
BAS	184	100	2022	184	27,974
BAS	200	100	2022	200	30,407
FGR	1,780	55	2022	979	148,842
FOP	216	30	2022	65	9,882
FOP	360	30	2022	108	16,420
FOP	360	30	2022	108	16,420
FOP	360	30	2022	108	16,420
FST	25	55	2022	14	2,128
TOTALS	6,905			4,780	726,729

MARKET ADJUSTMENTS

TYPE	MDL	EFF. AREA	TOT ADJ PTS	EFF. BASE RATE	REPL. COST NEW	AYB	EYB	ECON	FNCT		NORM	% COND
0500	01	4,780	100.2330	158.37	757,009	1994	2015	0	0	0	4.00	96.00

1 SFR CUST - 100% - 2024 Heated Area: 3324 HX Base Yr

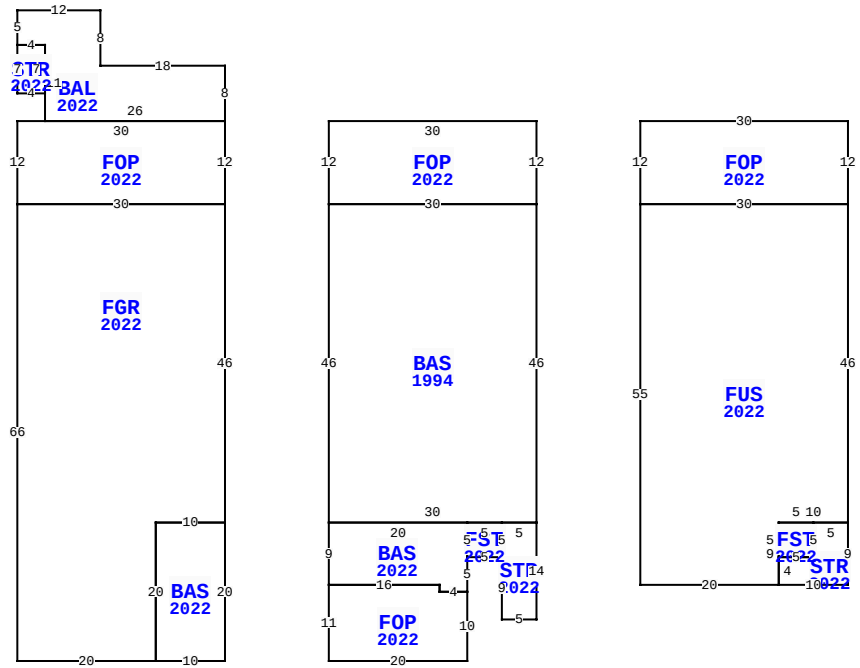

** This building has 15 Sub-Areas

2120 S FLETCHER AVE, FERNANDINA BEACH

BLD DATE		LGL DATE	
XF DATE		LAND DATE	05/07/2025 MLU
INC DATE		AG DATE	

NASSAU COUNTY PROPERTY

PAGE 1 of 1 2

VALUATION SUMMARY

VALUATION BY		STANDARD
Tax Group: 2	Tax Dist:	
BUILDING MARKET VALUE		726,729
TOTAL MARKET OB/XF VALUE		17,148
TOTAL LAND VALUE - MARKET		1,140,000
TOTAL MARKET VALUE		1,883,877
SOH/AGL Deduction		133,715
ASSESSED VALUE		1,750,162
TOTAL EXEMPTION VALUE	13	1,750,162
BASE TAXABLE VALUE		0
TOTAL JUST VALUE		1,883,877
NCON VALUE		0
INCOME VALUE		
PREVIOUS YEAR MKT VALUE		1,700,838

PERMIT NUM	DESCRIPTION	AMT	ISSUED
20200479	ADDITION	0	11/05/2020
B041664	XFOB	5,000	09/16/2004
8354	NEW CONSTR	78,900	05/27/1994
7554	REMODEL	7,971	02/26/1993

SALES DATA

OFF RECORD Number	DATE	TYPE INST	Q / U	V / I	RSN CD	SALE PRICE
2206/1013	6/26/2018	WD	Q	I	01	875,000
GRANTOR: JACKSON ROGER						
GRANTEE: REMICK FRANCIS A &						
1987/0844	6/15/2015	QC	U	I	11	100
GRANTOR: JACKSON SCOTT R						
GRANTEE: JACKSON ROGER D						

BUILDING NOTES

BUILDING DIMENSIONS

BAL=[YR=2022] N8W18 N8 W12 S5 STR=[YR=2022] S7 E4 N7 W4$ E4 S11 E26$ FOP=[YR=2022] W30 S12 FGR=[YR=2022] S66 E20 BAS=[YR=2022] E10 N20 W10 S20$ N20 E10 N46 W30$ E30 N12$ PTR=E15 FOP=[YR=2022] E30 S12 BAS=[YR=1994] S46 STR=[YR=2022] S14 W5 N9 FST=[YR=2022] W5BAS=[YR=2022] S5 FOP=[YR=2022] S10 W20 N11 E16 S1 E4$ W4 N1 W16 N9 E20 S5$ N5 E5S5$ N5 E5$ W30 N46 E30$ W30 N12$ W15$PTR= E60 FOP=[YR=2022] E30 S12 FUS=[YR=2022] S46 STR=[YR=2022] S9 W10 N4 FST=[YR=2022] N5E5S5W5$ E5N5E5$ W10 S9 W20 N55 E30$ W30 N12$ W60$.

EXTRA FEATURES

LN	OB/XF CODE	DESCRIPTION	BLD	CAP	L	W	UNITS	UT	Adj R	ADJ UNIT PRICE	ORIG COND	YEAR ON	YEAR ACTUAL	Q	% COND	OB/XF MKT VALUE	NOTES
1	0500	FP-PRE FAB	0	100	0	0	1.00	UT	3,500.00	3,500.00	100	2022	2022	3	99	3,465	
2	0855	CONC PAVER	0	100	0	0	1,360.00	SF	10.00	10.00	100	2022	2022	3	99	13,464	
3	0415	BEACHWALK	0	100	159	4	636.00	SF	1.73	1.73	100	1994	1994	3	20	219	

LAND DESCRIPTION

TOTAL OB/XF 17,148

LN	USE CODE	CLS	LAND USE DESCRIPTION	CAP	RD	LOC ZONE	FRONT	DEPTH	TOT LND UTS	UNIT TYPE	DT	DPTH FACT	% COND	TOT ADJ	UNIT PRICE	ADJ UNIT PRICE	LAND VALUE	OTHER ADJUSTMENTS AND NOTES	YEAR	DENSITY	DECL	FRZ	YR	CONSRV
1	000120	C	RES OCEAN	100		R-2	50.00	250.00	50.00	FF		1.00	1.00	1.20	19,000.00	22,800.00	1,140,000							

REVIEW DATE 02/22/2023 BY DJ Total Acres: 0.00 Total Land Value: 1,140,000 Market: 0 Agricultural: 0 Common: 1,140,000 PRINTED 07/30/2025 BY SYS