LOTS 272 & 273
IN OR 2002/1766
GA FDNA BEACH #2 UNR

WHITEHERSE BARBARA J
838 TARPON AVE
FERNANDINA BEACH, FL 32034

2025

00-00-31-134B-0272-0000

BUILDING CHARACTERISTICS

ELEMENT	CD	CONSTRUCTION
Exterior Wall	17	CB STUCCO 60
Exterior Wall	05	AVERAGE 40
Roof Structur	03	GABLE/HIP 100
Roof Cover	12	MODULAR MT 100
Interior Wall	04	PLYWOOD 100
Interior Floo	09	PINE WOOD 60
Interior Floo	11	CLAY TILE 40
Air Condition	03	CENTRAL 100
Heating Type	04	AIR DUCTED 100
Bedrooms		2 100
Bathrooms		2 100
Frame	03	MASONRY 100
Stories	2.	2. 100
Units		0 100
BUD8 Adjustme	02	DIST FB 100
Occupancy	00	NONE 100
Quality	03	Quality Level 03
DOR CODE	0100	SINGLE FAMILY
MAP NUM		MKT AREA 01
NEIGHBORHOOD/LOC	1041.00	

AREA TYPE	TOTAL GROSS AREA	PCT OF BASE	YEAR	TOT ADJ AREA	SUBAREA MARKET VALUE
BAL	456	15	2017	68	7,637
BAS	809	100	1993	809	90,857
FOP	156	30	1993	47	5,279
FOP	320	30	2017	96	10,782
FOP	324	30	2017	97	10,894
FUS	980	100	1993	980	110,061
FUS	486	100	2017	486	54,581
PTO	342	5	2017	17	1,910
UGR	252	45	1993	113	12,691
UGR	468	45	1993	211	23,697
TOTALS	4,593			2,924	328,387

MARKET ADJUSTMENTS

TYPE	MDL	EFF. AREA	TOT ADJ PTS	EFF. BASE RATE	REPL. COST NEW	AYB	EYB	ECON	FNCT		NORM	% COND
0900	01	2,924	101.8960	134.50	393,278	1962	1990	0	0	0	16.50	83.50

1 SNGL FAM – 100% - 2017 Heated Area: 2275 HX Base Yr 2017

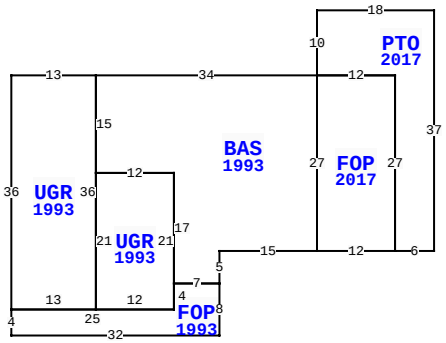

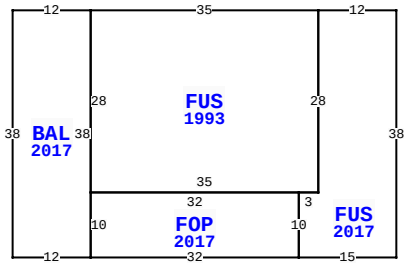

838 TARPON AVE, FERNANDINA BEACH

BLD DATE		LGL DATE	
XF DATE		LAND DATE	03/20/2024 MLU
INC DATE		AG DATE	

NASSAU COUNTY PROPERTY

PAGE 1 of 1 2

VALUATION SUMMARY

VALUATION BY		STANDARD
Tax Group: 2	Tax Dist:	
BUILDING MARKET VALUE		328,387
TOTAL MARKET OB/XF VALUE		11,462
TOTAL LAND VALUE - MARKET		420,000
TOTAL MARKET VALUE		759,849
SOH/AGL Deduction		295,317
ASSESSED VALUE		464,532
TOTAL EXEMPTION VALUE	HX HB WX	55,722
BASE TAXABLE VALUE		408,810
TOTAL JUST VALUE		759,849
NCON VALUE		0
INCOME VALUE		
PREVIOUS YEAR MKT VALUE		744,059

PERMIT NUM	DESCRIPTION	AMT	ISSUED
20161251	DEMO DECK	0	05/03/2016
20161254	515 SF	0	05/03/2016
20111038	H/AC	1,200	06/24/2011
20051407	REPAIR/RRF	5,000	03/14/2005
8013	REMODEL	3,400	12/01/1993

SALES DATA

OFF RECORD Number	DATE	TYPE INST	Q / U	V / I	RSN CD	SALE PRICE
2002/1766	9/04/2015	TD	U	I	11	100
GRANTOR: BRUNNER EDWARD F TRUS						
GRANTEE: WHITEHERSE JAMES A						
1383/1405	1/23/2006	TD	Q	I	01	100
GRANTOR: BRUNNER EDWARD F						
GRANTEE: BRUNNER EDWARD F TR						

BUILDING NOTES

EXTRA FEATURES

LN	OB/XF CODE	DESCRIPTION	BLD	CAP	L	W	UNITS	UT	Adj R	ADJ UNIT PRICE	ORIG COND	YEAR ON	YEAR ACTUAL	Q	% COND	OB/XF MKT VALUE	NOTES
1	0810	CONCRETE A	0	100	3	14	52.00	SF	6.50	6.50	100	1980	1980	3	30	101	
2	0811	CONCRETE B	0	100	0	0	791.00	SF	7.80	7.80	100	2017	2017	3	96	5,923	
3	0810	CONCRETE A	0	100	0	0	476.00	SF	9.75	9.75	100	2017	2017	3	96	4,455	
4	0810	CONCRETE A	0	100	3	35	105.00	SF	9.75	9.75	100	2017	2017	3	96	983	

BUILDING DIMENSIONS

PTO=[YR=2017] W18 S10 BAS=[YR=1993] W34 UGR=[YR=1993] W13 S36 FOP=[YR=1993] S4 E32 N8 W7 S4 W25 $ E13 N36 $ S15 UGR=[YR=1993] S21 E12 N21 W12 $ E12 S17 E7 N5 E15 FOP=[YR=2017] E12 N27 W12 S27$ N27$ E12 S27 E6 N37$ PTR= E15 BAL=[YR=2017] E12 FUS=[YR=1993] E35 FUS=[YR=2017] E12 S38 W15 FOP=[YR=2017] W32 N10 E32 S10$ N10 E3 N28$ S28 W35 N28$ S38 W12 N38$ W15$.

LAND DESCRIPTION

TOTAL OB/XF 11,462

LN	USE CODE	CLS	LAND USE DESCRIPTION	CAP	RD	LOC ZONE	FRONT	DEPTH	TOT LND UTS	UNIT TYPE	DT	DPTH FACT	% COND	TOT ADJ	UNIT PRICE	ADJ UNIT PRICE	LAND VALUE	OTHER ADJUSTMENTS AND NOTES	YEAR	DENSITY	DECL	FRZ	YR	CONSRV
1	000100	C	RES	100	0006	R-2	125.00	100.00	125.00	FF		1.00	1.00	0.80	4,200.00	3,360.00	420,000							

REVIEW DATE 03/21/2024 BY KBA Total Acres: 0.00 Total Land Value: 420,000 Market: 0 Agricultural: 0 Common: 420,000 PRINTED 07/30/2025 BY SYS