LOT 246-B
IN OR 2783/1320
DECLARATION CVNTS & RSTR

D'AMICO FAMILY TRUST/D'AMICO WILLIAM PETER JR TRUS
14 SOUTH ANCHORAGE AVE
BETHANY BEACH, DE 19930

2025

00-00-31-134B-0246-00B0

NASSAU COUNTY PROPERTY

BUILDING CHARACTERISTICS

ELEMENT	CD	CONSTRUCTION
Exterior Wall	16	WD FR STUC 100
Roof Structur	08	IRREGULAR 100
Roof Cover	03	COMP SHNGL 100
Interior Wall	05	DRYWALL 100
Interior Floo	14	CARPET 70
Interior Floo	08	SHT VINYL 30
Air Condition	03	CENTRAL 100
Heating Type	04	AIR DUCTED 100
Bedrooms		3 100
Bathrooms		2 100
Frame	02	WOOD FRAME 100
Stories	2.	2. 100
Units		0 100
Occupancy	00	NONE 100
Quality	03	Quality Level 03

DOR CODE 0100 SINGLE FAMILY
MAP NUM | MKT AREA 01
NEIGHBORHOOD/LOC 1041.0100

AREA TYPE	TOTAL GROSS AREA	PCT OF BASE	YEAR	TOT ADJ AREA	SUBAREA MARKET VALUE
BAS	657	100	1993	657	105,704
FGR	338	55	1993	186	29,925
FUS	916	100	1993	916	147,373
PTO	120	5	1993	6	965
UOP	42	20	1993	8	1,287
UOP	45	20	1993	9	1,448
TOTALS	2,118			1,782	286,703

MARKET ADJUSTMENTS

TYPE	MDL	EFF. AREA	TOT ADJ PTS	EFF. BASE RATE	REPL. COST NEW	AYB	EYB	ECON	FNCT		NORM	% COND
0320	12	1,782	190.4000	190.40	339,293	1993	1993	0	0	0	15.50	84.50

1 TOWNHOUSE - 100% - 2025 Heated Area: 1573 HX Base Yr 2025

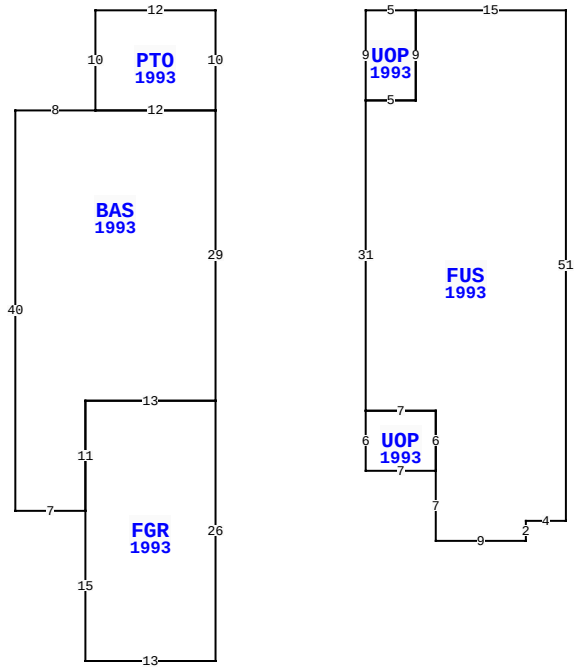

532 TARPON AVE B, FERNANDINA BEACH

BLD DATE		LGL DATE	
XF DATE		LAND DATE	03/20/2024 MLU
INC DATE		AG DATE	

NASSAU COUNTY PROPERTY — VALUATION SUMMARY

VALUATION BY		STANDARD
Tax Group: 2	Tax Dist:	
BUILDING MARKET VALUE		286,703
TOTAL MARKET OB/XF VALUE		2,519
TOTAL LAND VALUE - MARKET		198,750
TOTAL MARKET VALUE		487,972
SOH/AGL Deduction		0
ASSESSED VALUE		487,972
TOTAL EXEMPTION VALUE	HX HB	50,722
BASE TAXABLE VALUE		437,250
TOTAL JUST VALUE		487,972
NCON VALUE		0
INCOME VALUE		
PREVIOUS YEAR MKT VALUE		377,592

PERMIT NUM	DESCRIPTION	AMT	ISSUED
20041795	REROOF W/30YR SHN	0	10/05/2004
9950-B	REPAIR/RRF	5,500	07/29/1996

SALES DATA

OFF RECORD Number	DATE	TYPE INST	Q / U	V / I	RSN CD	SALE PRICE
2783/1320	4/28/2025	WD	Q	I	01	563,300
GRANTOR: GOSMAN FREDERICK WILL						
GRANTEE: D'AMICO FAMILY TRUS						
2688/254	1/02/2024	WD	U	I	37	500,000
GRANTOR: KELLNER DENNIS &						
GRANTEE: GOSMAN FREDERICK WI						

BUILDING NOTES

BUILDING DIMENSIONS

PTO=[YR=1993] W12 S10 BAS=[YR=1993] W8 S40 E7 FGR=[YR=1993] S15 E13 N26 W13 S11 $ N11 E13 N29 W12 $ E12 N10 $ PTR= E15 UOP=[YR=1993] E5 FUS=[YR=1993] E15 S51 W4 S2 W9 N7 UOP=[YR=1993] N6 W7 S6 E7 $ N6 W7 N31 E5 N9 $ S9 W5 N9 $ W15 $.

EXTRA FEATURES

LN	OB/XF CODE	DESCRIPTION	BLD	CAP	L	W	UNITS	UT	Adj R	ADJ UNIT PRICE	ORIG COND	YEAR ON	YEAR ACTUAL	Q	% COND	OB/XF MKT VALUE	NOTES
1	0810	CONCRETE A	0	100	0	0	455.00	SF	6.50	6.50	100	1993	1993	3	64	1,893	
2	1241	WD DECK G	0	100	8	7	56.00	UT	11.50	11.50	100	1993	1993	3	20	129	
3	1241	WD DECK G	0	100	8	20	160.00	UT	15.53	15.53	100	1995	1995	3	20	497	

LAND DESCRIPTION

TOTAL OB/XF 2,519

LN	USE CODE	CLS	LAND USE DESCRIPTION	CAP	RD	LOC ZONE	FRONT	DEPTH	TOT LND UTS	UNIT TYPE	DT	DPTH FACT	% COND	TOT ADJ	UNIT PRICE	ADJ UNIT PRICE	LAND VALUE	OTHER ADJUSTMENTS AND NOTES	YEAR	DENSITY	DECL	FRZ	YR	CONSRV
1	000100	C	RES	100	0006	R-2	25.00	100.00	25.00	FF		1.00	1.00	1.50	5,300.00	7,950.00	198,750							

REVIEW DATE 05/12/2019 BY KBA Total Acres: 0.00 Total Land Value: 198,750 Market: 0 Agricultural: 0 Common: 198,750 PRINTED 07/30/2025 BY SYS