LOT 225
L/E IN OR 734 PG 1048
GA FDNA BEACH # 2 UNR

ROBERTS DONALD W L/E/
333 N FLETCHER AV
FERNANDINA BEACH, FL 32034

2025

00-00-31-134B-0225-0000

BUILDING CHARACTERISTICS

ELEMENT	CD	CONSTRUCTION
Exterior Wall	14	WD SHINGLE 100
Roof Structur	03	GABLE/HIP 100
Roof Cover	12	MODULAR MT 100
Interior Wall	02	WALL BD/WD 50
Interior Wall	05	DRYWALL 50
Interior Floo	12	HARDWOOD 50
Interior Floo	14	CARPET 50
Air Condition	03	CENTRAL 100
Heating Type	04	AIR DUCTED 100
Bedrooms		4 100
Bathrooms		2 100
Frame	02	WOOD FRAME 100
Stories	2.	2. 100
Units		0 100
BUD8 Adjustme	02	DIST FB 100
Occupancy	00	NONE 100
Quality	03	Quality Level 03
DOR CODE	0800	MULTI-FAMILY
MAP NUM		MKT AREA 01
NEIGHBORHOOD/LOC	1041.00	

AREA TYPE	TOTAL GROSS AREA	PCT OF BASE	YEAR	TOT ADJ AREA	SUBAREA MARKET VALUE
APT	1,000	100	1993	1,000	113,270
HXB	1,044	100	1993	1,044	118,254
HXP	192	30	1993	58	6,569
HXU	66	55	1993	36	4,078
UOP	80	20	1993	16	1,813
UOP	90	20	1993	18	2,038
TOTALS	2,472			2,172	246,023

MARKET ADJUSTMENTS

TYPE	MDL	EFF. AREA	TOT ADJ PTS	EFF. BASE RATE	REPL. COST NEW	AYB	EYB	ECON	FNCT		NORM	% COND
2700	01	2,172	103.3900	136.47	296,413	1945	1990	0	0	0	17.00	83.00

1 DUPLEX – 52.39% - 1996 Heated Area: 2044 HX Base Yr 1996

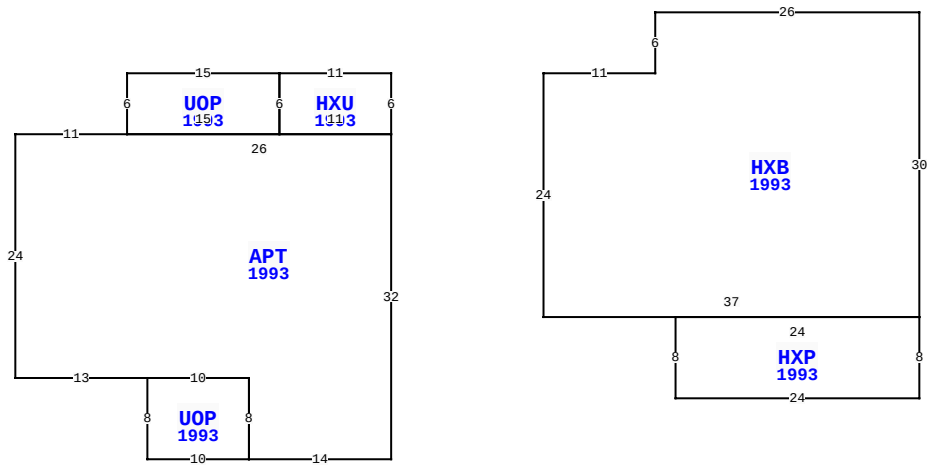

333 N FLETCHER AVE, FERNANDINA BEACH

BLD DATE		LGL DATE	
XF DATE		LAND DATE	03/20/2024 MLU
INC DATE		AG DATE	

NASSAU COUNTY PROPERTY

PAGE 1 of 1 2

VALUATION SUMMARY

VALUATION BY		STANDARD
Tax Group: 2	Tax Dist:	
BUILDING MARKET VALUE		246,023
TOTAL MARKET OB/XF VALUE		2,300
TOTAL LAND VALUE - MARKET		337,875
TOTAL MARKET VALUE		586,198
SOH/AGL Deduction		380,602
ASSESSED VALUE		205,596
TOTAL EXEMPTION VALUE	HX HB	50,722
BASE TAXABLE VALUE		154,874
TOTAL JUST VALUE		586,198
NCON VALUE		0
INCOME VALUE		
PREVIOUS YEAR MKT VALUE		574,606

PERMIT NUM	DESCRIPTION	AMT	ISSUED
20040037	METAL ROOF	3,000	01/09/2004
7762	REPAIR/RRF	11,600	06/18/1993

SALES DATA

OFF RECORD Number	DATE	TYPE INST	Q U /	V I /	RSN CD	SALE PRICE
0734/1048	7/21/1995	DG	U	I	18	3,100
GRANTOR: LOTT JUDY B						
GRANTEE: LOTT J B L/E & D W						
0656/0828	5/04/1992	WD	U	I	10	60,000
GRANTOR: KATONA MARTA						
GRANTEE: LOTT JUDY B						

BUILDING NOTES

BUILDING DIMENSIONS

HXU=[YR=1993] W11 UOP=[YR=1993] W15 S6 APT=[YR=1993] W11 S24 E13 UOP=[YR=1993] S8 E10 N8 W10 $ E10 S8 E14 N32 W26 $ E15 N6 $ S6 E11 N6 $ PTR= E15 HXB=[YR=1993] E11 N6 E26 S30 HXP=[YR=1993] S8 W24 N8 E24 $ W37 N24$ W15 $.

EXTRA FEATURES

LN	OB/XF CODE	DESCRIPTION	BLD	CAP	L	W	UNITS	UT	Adj R	ADJ UNIT PRICE	ORIG COND	YEAR ON	YEAR ACTUAL	Q	% COND	OB/XF MKT VALUE	NOTES
1	1242	WD DECK A	0	100	22	6	132.00	SF	4.00	4.00	100	2000	2000	3	20	106	
2	0825	BRICK	0	100	0	0	287.00	SF	6.25	6.25	100	1993	1993	3	88	1,579	
3	1241	WD DECK G	0	100	22	4	88.00	UT	11.50	11.50	100	2000	2000	3	27	273	
4	1241	WD DECK G	0	100	22	5	110.00	UT	11.50	11.50	100	2000	2000	3	27	342	

LAND DESCRIPTION

TOTAL OB/XF 2,300

LN	USE CODE	CLS	LAND USE DESCRIPTION	CAP	RD	LOC ZONE	FRONT	DEPTH	TOT LND UTS	UNIT TYPE	DT	DPTH FACT	% COND	TOT ADJ	UNIT PRICE	ADJ UNIT PRICE	LAND VALUE	OTHER ADJUSTMENTS AND NOTES	YEAR	DENSITY	DECL	FRZ	YR	CONSRV
1	000800	C	MULTI-FAMILY	100	0006	R-2	75.00	100.00	75.00	FF		1.00	1.00	0.85	5,300.00	4,505.00	337,875							

REVIEW DATE 06/06/2024 BY KBA Total Acres: 0.00 Total Land Value: 337,875 Market: 0 Agricultural: 0 Common: 337,875 PRINTED 07/30/2025 BY SYS