LOT 216
IN OR 1184/750
GA FDNA BEACH 2 UNR

PELICAN JOHN F & SARAH L
425 N FLETCHER AV
FERNANDINA BEACH, FL 32034

**2025**

**00-00-31-134B-0216-0000**

## NASSAU COUNTY PROPERTY



## BUILDING CHARACTERISTICS

| ELEMENT | CD | CONSTRUCTION |
|---|---|---|
| Exterior Wall | 16 | WD FR STUC 100 |
| Roof Structur | 08 | IRREGULAR 100 |
| Roof Cover | 12 | MODULAR MT 100 |
| Interior Wall | 05 | DRYWALL 100 |
| Interior Floo | 12 | HARDWOOD 60 |
| Interior Floo | 11 | CLAY TILE 40 |
| Air Condition | 03 | CENTRAL 100 |
| Heating Type | 04 | AIR DUCTED 100 |
| Bedrooms | | 3 100 |
| Bathrooms | | 3 100 |
| Frame | 02 | WOOD FRAME 100 |
| Stories | 2.5 | 2.5 100 |
| Units | | 0 100 |
| BUD8 Adjustme | 02 | DIST FB 100 |
| Occupancy | 00 | NONE 100 |
| Quality | 04 | Quality Level 04 |
| DOR CODE | 0100 | SINGLE FAMILY |
| MAP NUM | | MKT AREA 01 |
| NEIGHBORHOOD/LOC | 1041.00 | |

| AREA TYPE | TOTAL GROSS AREA | PCT OF BASE | YEAR | TOT ADJ AREA | SUBAREA MARKET VALUE |
|---|---|---|---|---|---|
| BAS | 799 | 100 | 2009 | 799 | 112,332 |
| DCK | 16 | 10 | 2009 | 2 | 281 |
| FGR | 567 | 55 | 2009 | 312 | 43,864 |
| FOP | 8 | 30 | 2009 | 2 | 281 |
| FOP | 32 | 30 | 2009 | 10 | 1,406 |
| FOP | 112 | 30 | 2009 | 34 | 4,780 |
| FOP | 176 | 30 | 2009 | 53 | 7,451 |
| FUS | 660 | 100 | 2009 | 660 | 92,790 |
| FUS | 1,378 | 100 | 2009 | 1,378 | 193,734 |
| STP | 40 | 10 | 2009 | 4 | 562 |
| TOTALS | 4,196 | | | 3,329 | 468,027 |

## MARKET ADJUSTMENTS

| TYPE | MDL | EFF. AREA | TOT ADJ PTS | EFF. BASE RATE | REPL. COST NEW | AYB | EYB | ECON | FNCT | | NORM | % COND |
|---|---|---|---|---|---|---|---|---|---|---|---|---|
| 0900 | 01 | 3,329 | 115.1472 | 151.99 | 505,975 | 2009 | 2009 | 0 | 0 | 0 | 7.50 | 92.50 |

1 SNGL FAM – 100% - 2010 Heated Area: 2837 HX Base Yr 2010

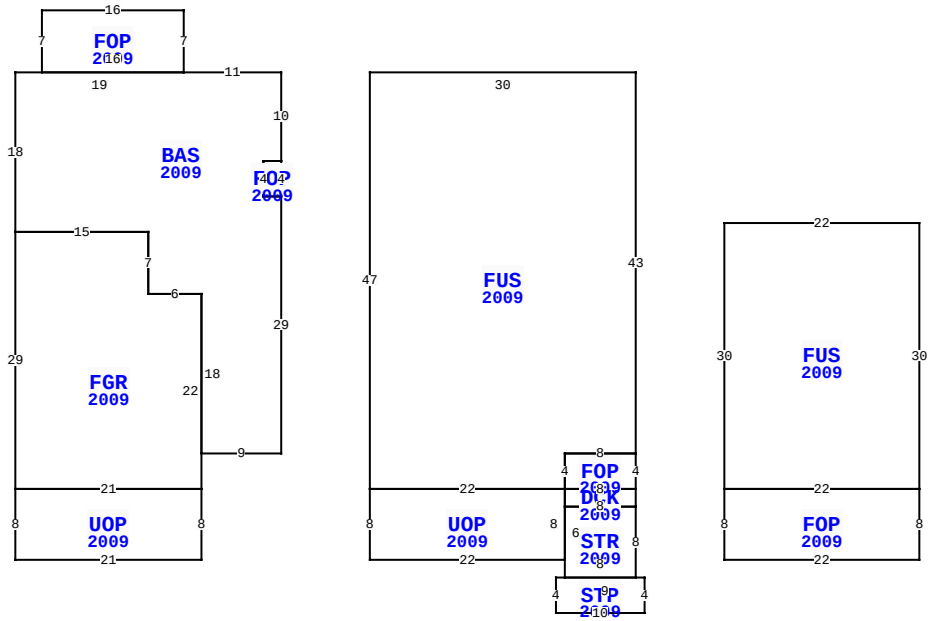


** This building has 13 Sub-Areas

425 N FLETCHER AVE, FERNANDINA BEACH

| | | | |
|---|---|---|---|
| BLD DATE | | LGL DATE | |
| XF DATE | | LAND DATE | 03/20/2024 MLU |
| INC DATE | | AG DATE | |

## VALUATION SUMMARY

| | | |
|---|---|---|
| VALUATION BY | | STANDARD |
| Tax Group: 2 | Tax Dist: | |
| BUILDING MARKET VALUE | | 468,027 |
| TOTAL MARKET OB/XF VALUE | | 12,590 |
| TOTAL LAND VALUE - MARKET | | 265,000 |
| TOTAL MARKET VALUE | | 745,617 |
| SOH/AGL Deduction | | 355,733 |
| ASSESSED VALUE | | 389,884 |
| TOTAL EXEMPTION VALUE | HX HB | 50,722 |
| BASE TAXABLE VALUE | | 339,162 |
| TOTAL JUST VALUE | | 745,617 |
| NCON VALUE | | 0 |
| INCOME VALUE | | |
| PREVIOUS YEAR MKT VALUE | | 723,307 |

| PERMIT NUM | DESCRIPTION | AMT | ISSUED |
|---|---|---|---|
| 20182564 | REMODEL | 10,000 | 07/24/2018 |
| 20081579 | H/AC | 7,000 | 10/16/2008 |
| 20081157 | OTHER | 7,900 | 07/15/2008 |
| 20081089 | ELEC OTHER | 300 | 06/30/2008 |
| 20081066 | NEW CONSTR | 275,000 | 06/25/2008 |
| 20080998 | DEMOLITION | 7,500 | 06/10/2008 |

## SALES DATA

| OFF RECORD Number | DATE | TYPE INST | Q / U | V / I | RSN CD | SALE PRICE |
|---|---|---|---|---|---|---|
| 1184/0750 | 10/28/2003 | WD | Q | I | | 240,000 |
| GRANTOR: DOYLE DELORES L | | | | | | |
| GRANTEE: PELICAN JOHN F & SA | | | | | | |
| 0808/1630 | 10/06/1997 | QC | Q | I | 06 | 25,500 |
| GRANTOR: DOYLE ROBERT E | | | | | | |
| GRANTEE: DOYLE DELORES L | | | | | | |

## BUILDING NOTES

## EXTRA FEATURES

| LN | OB/XF CODE | DESCRIPTION | BLD | CAP | L | W | UNITS | UT | Adj R | ADJ UNIT PRICE | ORIG COND | YEAR ON | YEAR ACTUAL | Q | % COND | OB/XF MKT VALUE | NOTES |
|---|---|---|---|---|---|---|---|---|---|---|---|---|---|---|---|---|---|
| 1 | 0855 | CONC PAVER | 0 | 100 | 0 | 0 | 1,140.00 | SF | 10.00 | 10.00 | 100 | 2009 | 2009 | 3 | 89 | 10,146 | |
| 2 | 1129 | STONE 8" | 0 | 100 | 80 | 2 | 160.00 | SF | 15.75 | 15.75 | 100 | 2009 | 2009 | 3 | 97 | 2,444 | |

## BUILDING DIMENSIONS

BAS=[YR=2009] W11 FOP=[YR=2009] N7W16S7E16 $W19S18
FGR=[YR=2009] S29 UOP=[YR=2009] S8
E21N8W21$E21N22W6N7W15$E15S7E6 S18E9N29 FOP=[YR=2009]
N4W2S4E2$W2N4 E2N10$ PTR=E10 FUS=[YR=2009] S47 UOP=[YR=2009]
S8E22STR=[YR=2009] S2 STP=[YR=2009] W1S4E10N4W9$E8N8
DCK=[YR=2009] N2 FOP=[YR=2009] N4W8S4E8$W8
S2E8$W8S6$N8W22$E22N4E8N43W30$ W10$ PTR=E50 S17 FUS=[YR=2009]
S30 FOP=[YR=2009] S8E22 N8W22$ E22N30W22 $ N17W50$.

## LAND DESCRIPTION

TOTAL OB/XF 12,590

| LN | USE CODE | CLS | LAND USE DESCRIPTION | CAP | RD | LOC ZONE | FRONT | DEPTH | TOT LND UTS | UNIT TYPE | DT | DPTH FACT | % COND | TOT ADJ | UNIT PRICE | ADJ UNIT PRICE | LAND VALUE | OTHER ADJUSTMENTS AND NOTES | YEAR | DENSITY | DECL | FRZ | YR | CONSRV |
|---|---|---|---|---|---|---|---|---|---|---|---|---|---|---|---|---|---|---|---|---|---|---|---|---|
| 1 | 000100 | C | RES | 100 | 0006 | R-2 | 50.00 | 100.00 | 50.00 | FF | | 1.00 | 1.00 | 1.00 | 5,300.00 | 5,300.00 | 265,000 | | | | | | | |

REVIEW DATE 05/12/2019 BY KBA Total Acres: 0.00 Total Land Value: 265,000 Market: 0 Agricultural: 0 Common: 265,000 PRINTED 07/30/2025 BY SYS