LOT 167
IN OR 1354/734
GA FDNA BEACH 2 UNR

O'BRIEN EILEEN & DANIEL
838 N FLETCHER AVE
FERNANDINA BEACH, FL 32034

2025

00-00-31-134B-0167-0000

BUILDING CHARACTERISTICS

ELEMENT	CD	CONSTRUCTION
Exterior Wall	10	ABOVE AVG 100
Roof Structur	03	GABLE/HIP 100
Roof Cover	03	COMP SHNGL 100
Interior Wall	05	DRYWALL 100
Interior Floo	11	CLAY TILE 100
Air Condition	03	CENTRAL 100
Heating Type	04	AIR DUCTED 100
Bedrooms		4 100
Bathrooms		3 100
Frame	07	SPECIAL 100
Stories	3.	3. 100
Units		0 100
BUD8 Adjustme	02	DIST FB 100
Quality	03	Quality Level 03

DOR CODE 0100 SINGLE FAMILY
MAP NUM | MKT AREA 01
NEIGHBORHOOD/LOC 1041.00

AREA TYPE	TOTAL GROSS AREA	PCT OF BASE	YEAR	TOT ADJ AREA	SUBAREA MARKET VALUE
BAS	210	100	2007	210	47,297
DCK	48	10	2007	5	1,126
FGR	91	55	2008	50	11,262
FGR	911	55	2008	501	112,838
FOP	28	30	2007	8	1,801
FOP	91	30	2007	27	6,081
FOP	290	30	2007	87	19,594
FUS	1,121	100	2007	1,121	252,477
FUS	1,212	100	2007	1,212	272,973
UCP	290	20	2007	58	13,063
TOTALS	4,582			3,337	751,577

MARKET ADJUSTMENTS

TYPE	MDL	EFF. AREA	TOT ADJ PTS	EFF. BASE RATE	REPL. COST NEW	AYB	EYB	ECON	FNCT		NORM	% COND
0500	11	3,337	154.9400	244.81	816,931	2007	2007	0	0	0	8.00	92.00

1 SFR CUST – 100% - 2023 Heated Area: 2543 HX Base Yr 2023

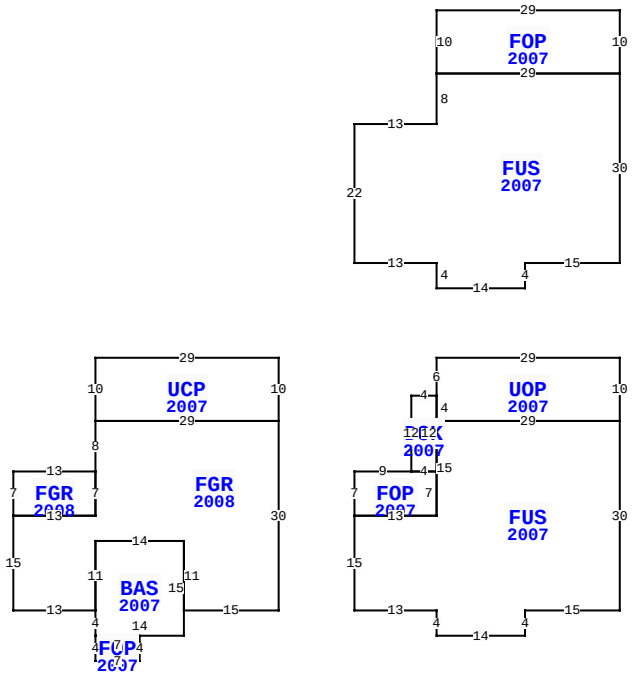

** This building has 11 Sub-Areas

BLD DATE		LGL DATE	
XF DATE		LAND DATE	05/22/2024 MLU
INC DATE		AG DATE	

838 N FLETCHER AVE, FERNANDINA BEACH

NASSAU COUNTY PROPERTY

PAGE 1 of 1 2

VALUATION SUMMARY

VALUATION BY		STANDARD
Tax Group: 2	Tax Dist:	
BUILDING MARKET VALUE		751,577
TOTAL MARKET OB/XF VALUE		12,780
TOTAL LAND VALUE - MARKET		446,250
TOTAL MARKET VALUE		1,210,607
SOH/AGL Deduction		132,323
ASSESSED VALUE		1,078,284
TOTAL EXEMPTION VALUE	HX HB	50,722
BASE TAXABLE VALUE		1,027,562
TOTAL JUST VALUE		1,210,607
NCON VALUE		0
INCOME VALUE		
PREVIOUS YEAR MKT VALUE		1,176,700

PERMIT NUM	DESCRIPTION	AMT	ISSUED
20101379	VINYL FENCE	1,000	08/19/2010
20081308	ELEC OTHER	500	08/18/2008
20081275	ADDITION	26,000	08/08/2008
20071453	OTHER	2,500	08/06/2007
20062519	H/AC	6,000	11/13/2006
20062052	NEW CONSTR	7,000	09/05/2006

SALES DATA

OFF RECORD Number	DATE	TYPE INST	Q U	V I	RSN CD	SALE PRICE
2524/1018	11/30/2021	WD	U	I	11	100
GRANTOR: O'BRIEN EILEEN & DANI						
GRANTEE: O'BRIEN EILEEN & DA						
2517/1412	11/30/2021	WD	Q	I	01	1,250,000
GRANTOR: RUNYEON JAMES M & DON						
GRANTEE: O'BRIEN EILEEN & DA						

BUILDING NOTES

BUILDING DIMENSIONS

UCP=[YR=2007] W29 S10 FGR=[YR=2008] S8 FGR=[YR=2008] W13 S7 E13 N7$ S7 W13 S15 E13 BAS=[YR=2007] S4 FOP=[YR=2007] S4 E7 N4 W7$ E14 N15 W14 S11$ N11 E14 S11 E15 N30 W29$ E29 N10$ PTR=E25 UOP=[YR=2007] S6 DCK=[YR=2007] W4 S12 FOP=[YR=2007] W9 S7 FUS=[YR=2007] S15 E13 S4 E14 N4 E15 N30 W29 S15 W13$ E13 N7 W4$ E4 N12$ S4 E29 N10 W29$ W25$ PTR=E25 N55 FOP=[YR=2007] S10 FUS=[YR=2007] S8 W13 S22 E13 S4 E14 N4 E15 N30 W29$ E29 N10 W29$ S55 W25$.

EXTRA FEATURES

LN	OB/XF CODE	DESCRIPTION	BLD	CAP	L	W	UNITS	UT	Adj R	ADJ UNIT PRICE	ORIG COND	YEAR ON	YEAR ACTUAL	Q	% COND	OB/XF MKT VALUE	NOTES
1	0877	JACUZZI	0	100	0	0	1.00	UT	1,000.00	1,000.00	100	2007	2007	3	27	270	
2	0810	CONCRETE A	0	100	0	0	1,200.00	SF	6.50	6.50	100	2007	2007	3	87	6,786	
3	0940	SHEDS/PORT	0	100	4	4	16.00	SF	30.00	30.00	100	2007	2007	3	27	130	
4	0476	VF 6 SBPL	0	100	0	0	230.00	LF	32.00	32.00	100	2010	2010	3	76	5,594	

LAND DESCRIPTION

TOTAL OB/XF 12,780

LN	USE CODE	CLS	LAND USE DESCRIPTION	CAP	RD	LOC ZONE	FRONT	DEPTH	TOT LND UTS	UNIT TYPE	DT	DPTH FACT	% COND	TOT ADJ	UNIT PRICE	ADJ UNIT PRICE	LAND VALUE	OTHER ADJUSTMENTS AND NOTES	YEAR	DENSITY	DECL	FRZ	YR	CONSRV
1	000100	C	RES	100		R-2	75.00	100.00	75.00	FF		1.00	1.00	0.85	7,000.00	5,950.00	446,250							

REVIEW DATE 03/21/2024 BY KBA Total Acres: 0.00 Total Land Value: 446,250 Market: 0 Agricultural: 0 Common: 446,250 PRINTED 07/30/2025 BY SYS