LOT 175
FOREST HILLS 4 PB 4/61

BENGSTON CHARLES P/MCCARTHY CLAUDIA T
1907 SUNRISE DR
FERNANDINA BEACH, FL 32304

2025

00-00-31-128D-0175-0000

NASSAU COUNTY PROPERTY

BUILDING CHARACTERISTICS

ELEMENT	CD	CONSTRUCTION
Exterior Wall	19	COMMON BRK 80
Exterior Wall	31	HARDIE BRD 20
Roof Structur	03	GABLE/HIP 100
Roof Cover	03	COMP SHNGL 80
Roof Cover	12	MODULAR MT 20
Interior Wall	05	DRYWALL 100
Interior Floo	13	LVT/LAMNT 90
Interior Floo	11	CLAY TILE 10
Air Condition	03	CENTRAL 100
Heating Type	04	AIR DUCTED 100
Bedrooms		4 100
Bathrooms		2.5 100
Frame	03	MASONRY 100
Stories	1.	1. 100
Units		0 100
BUD8 Adjustme	02	DIST FB 100
Occupancy	00	NONE 100
Quality	04	Quality Level 04
DOR CODE	0100	SINGLE FAMILY
MAP NUM		MKT AREA 01
NEIGHBORHOOD/LOC	1007.00	

AREA TYPE	TOTAL GROSS AREA	PCT OF BASE	YEAR	TOT ADJ AREA	SUBAREA MARKET VALUE
BAS	2,307	100	1993	2,307	366,511
BAS	12	100	2025	12	1,906
BAS	312	100	2025	312	49,567
BAS	332	100	2025	332	52,744
FGR	192	55	1993	106	16,841
FGR	361	55	2025	199	31,615
FOP	313	30	2025	94	14,933
FSP	420	40	2025	168	26,690
FST	200	55	2025	110	17,475
PTO	168	5	2025	8	1,271
TOTALS	4,617			3,648	579,555

MARKET ADJUSTMENTS

TYPE	MDL	EFF. AREA	TOT ADJ PTS	EFF. BASE RATE	REPL. COST NEW	AYB	EYB	ECON	FNCT		NORM	% COND
0500	01	3,648	113.8725	179.92	656,348	1979	2010	0	0	0	11.70	88.30

1 SFR CUST – 100% - 2025 Heated Area: 2963 HX Base Yr 2025

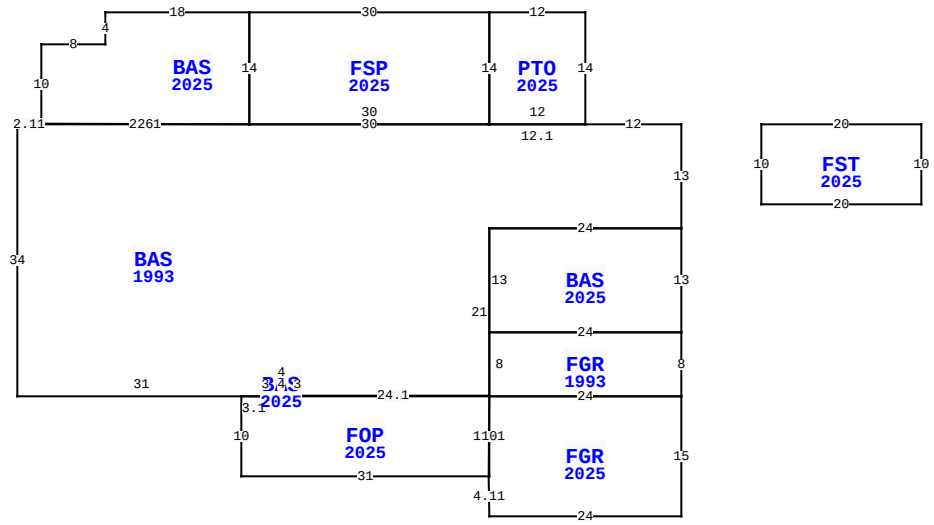

1907 SUNRISE DR, FERNANDINA BEACH

BLD DATE		LGL DATE	
XF DATE		LAND DATE	04/09/2025 MLU
INC DATE		AG DATE	

VALUATION SUMMARY

VALUATION BY		STANDARD
Tax Group: 2	Tax Dist:	
BUILDING MARKET VALUE		579,555
TOTAL MARKET OB/XF VALUE		6,110
TOTAL LAND VALUE - MARKET		300,000
TOTAL MARKET VALUE		885,665
SOH/AGL Deduction		0
ASSESSED VALUE		885,665
TOTAL EXEMPTION VALUE	HX HB	50,722
BASE TAXABLE VALUE		834,943
TOTAL JUST VALUE		885,665
NCON VALUE		257,441
INCOME VALUE		
PREVIOUS YEAR MKT VALUE		590,104

PERMIT NUM	DESCRIPTION	AMT	ISSUED
BLDR-2023-0	ADDITION	675,000	12/19/2023
8307	REPAIR/RRF	2,900	05/11/1994

SALES DATA

OFF RECORD Number	DATE	TYPE INST	Q U	V I	RSN CD	SALE PRICE
2567/0988	6/03/2022	PR	Q	I	02	675,000
GRANTOR: CORNAIRE VICKI PERSON						
GRANTEE: BENGSTON CHARLES P						
1580/0893	8/08/2008	WD	Q	I		415,000
GRANTOR: LEDBETTER JEFFREY P &						
GRANTEE: GEIGER ODIS GLENN						

BUILDING NOTES

EXTRA FEATURES

LN	OB/XF CODE	DESCRIPTION	BLD	CAP	L	W	UNITS	UT	Adj R	ADJ UNIT PRICE	ORIG COND	YEAR ON	YEAR ACTUAL	Q	% COND	OB/XF MKT VALUE	NOTES
1	0500	FP-PRE FAB	0	100	0	0	1.00	UT	3,500.00	3,500.00	100	1979	1979	3	42	1,470	
2	0810	CONCRETE A	0	100	0	0	1,600.00	SF	6.50	6.50	100	1980	1980	3	30	3,120	
4	0855	CONC PAVER	0	100	0	0	152.00	SF	10.00	10.00	100	2025	2024		100	1,520	

BUILDING DIMENSIONS

BAS=[YR=1993;ORIG=0,0] W12 W12.1 E0.1 W30 U0.1L26.1 D0.1L2.11 S34 E31 N3 E4 S3 E24 N21 E24 N13 $
FSP=[YR=2025;ORIG=-54,-14] S14 E30 N14 W30 $
FGR=[YR=2025;ORIG=0,34] S15 W24 U4.11L0.1 U10.1R0.1 E24 $
BAS=[YR=2025;ORIG=-80,0] N10 E8 N4 E18 S14 W26 $
FOP=[YR=2025;ORIG=-24,34] S10 W31 N10 E3.1 U0.1R3.10 E24.1 $
BAS=[YR=2025;ORIG=-24,13] E24 S13 W24 N13 $
FGR=[YR=1993;ORIG=-24,34] E24 N8 W24 S8 $
PTO=[YR=2025;ORIG=-24,-14] S14 E12 N14 W12 $
BAS=[YR=2025;ORIG=-52,34] E4 N3 W4 S3 $
FST=[YR=2025;ORIG=10,0] E20 S10 W20 N10 $
.

LAND DESCRIPTION

TOTAL OB/XF 6,110

LN	USE CODE	CLS	LAND USE DESCRIPTION	CAP	RD	LOC ZONE	FRONT	DEPTH	TOT LND UTS	UNIT TYPE	DT	DPTH FACT	% COND	TOT ADJ	UNIT PRICE	ADJ UNIT PRICE	LAND VALUE	OTHER ADJUSTMENTS AND NOTES	YEAR	DENSITY	DECL	FRZ	YR	CONSRV
1	000100	C	RES	100		R-1	105.00	150.00	1.00	LT		1.00	1.00	1.00	300,000.00	300,000.00	300,000							

REVIEW DATE 11/13/2024 BY DJ Total Acres: 0.00 Total Land Value: 300,000 Market: 0 Agricultural: 0 Common: 300,000 PRINTED 07/30/2025 BY SYS