LOT 107
IN OR 1863/394
FOREST HILLS 2 PB 2/77

GREGORY THOMAS LEE
916 STANLEY DR
FERNANDINA BEACH, FL 32034

2025

00-00-31-128B-0107-0000

BUILDING CHARACTERISTICS

ELEMENT	CD	CONSTRUCTION
Exterior Wall	15	CONC BLOCK 100
Roof Structur	03	GABLE/HIP 100
Roof Cover	03	COMP SHNGL 100
Interior Wall	03	PLASTER 100
Interior Floo	14	CARPET 80
Interior Floo	08	SHT VINYL 20
Air Condition	03	CENTRAL 100
Heating Type	04	AIR DUCTED 100
Bedrooms		2 100
Bathrooms		1 100
Frame	03	MASONRY 100
Stories	1.	1. 100
Units		0 100
BUD8 Adjustme	02	DIST FB 100
Occupancy	00	NONE 100
Quality	03	Quality Level 03
DOR CODE	0100	SINGLE FAMILY
MAP NUM		MKT AREA 01
NEIGHBORHOOD/LOC	1007.00	

AREA TYPE	TOTAL GROSS AREA	PCT OF BASE	YEAR	TOT ADJ AREA	SUBAREA MARKET VALUE
BAS	1,265	100	1993	1,265	98,798
FCP	166	25	1993	42	3,280
FOP	112	30	1993	34	2,656
FSP	209	40	1993	84	6,561
UDU	120	55	1993	66	5,154
UDU	310	55	1994	170	13,277
UGR	832	45	1994	374	29,209
UOP	356	20	1994	71	5,545
UST	384	45	1994	173	13,511
TOTALS	3,754			2,279	177,993

MARKET ADJUSTMENTS

TYPE	MDL	EFF. AREA	TOT ADJ PTS	EFF. BASE RATE	REPL. COST NEW	AYB	EYB	ECON	FNCT		NORM	% COND
0100	01	2,279	97.0200	97.02	221,109	1955	1985	0	0	0	19.50	80.50

1 SINGLE FAM – 100% - 0 Heated Area: 1265 HX Base Yr 2005

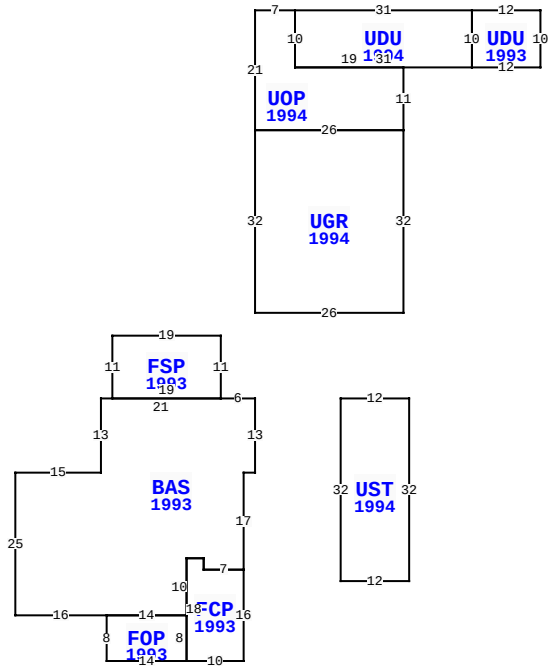

BLD DATE		LGL DATE	
XF DATE		LAND DATE	05/08/2025 MLU
INC DATE		AG DATE	

916 STANLEY DR, FERNANDINA BEACH

NASSAU COUNTY PROPERTY

PAGE 1 of 1 2

VALUATION SUMMARY

VALUATION BY		STANDARD
Tax Group: 2	Tax Dist:	
BUILDING MARKET VALUE		177,993
TOTAL MARKET OB/XF VALUE		5,053
TOTAL LAND VALUE - MARKET		225,000
TOTAL MARKET VALUE		408,046
SOH/AGL Deduction		303,288
ASSESSED VALUE		104,758
TOTAL EXEMPTION VALUE	HX HB	50,722
BASE TAXABLE VALUE		54,036
TOTAL JUST VALUE		408,046
NCON VALUE		0
INCOME VALUE		
PREVIOUS YEAR MKT VALUE		400,319

PERMIT NUM	DESCRIPTION	AMT	ISSUED
20012016	REPAIR/RRF	0	09/11/2001
2004435	REPAIR/RRF	1,000	12/01/2000
7167	GARAGE	5,000	07/01/1992

SALES DATA

OFF RECORD Number	DATE	TYPE INST	Q U	V I	RSN CD	SALE PRICE
1863/0394	6/13/2013	QC	U	I	11	100
GRANTOR: GREGORY THOMAS LEE JR						
GRANTEE: GREGORY THOMAS LEE						
1218/0082	3/26/2004	QC	Q	I	01	100
GRANTOR: GREGORY THOMAS L						
GRANTEE: GREGORY THOMAS L &						

BUILDING NOTES

BUILDING DIMENSIONS

BAS=[YR=1993] W6 FSP=[YR=1993] N11 W19 S11 E19 $ W21 S13 W15 S25 E16 FOP=[YR=1993] S8 E14 FCP=[YR=1993] E10 N16 W7 N2 W3 S18 $ N8 W14 $ E14 N10E3 S2 E7 N17 E2 N13 $ PTR= N15 UGR=[YR=1994] N32 UOP=[YR=1994] N21 E7 UDU=[YR=1994] E31 UDU=[YR=1993] E12 S10 W12 N10$ S10 W31 N10$ S10 E19 S11 W26$ E26 S32 W26 $ S15 $ PTR= E15 UST=[YR=1994] E12 S32 W12 N32 $ W15 $.

EXTRA FEATURES

LN	OB/XF CODE	DESCRIPTION	BLD	CAP	L	W	UNITS	UT	Adj R	ADJ UNIT PRICE	ORIG COND	YEAR ON	YEAR ACTUAL	Q	% COND	OB/XF MKT VALUE	NOTES
1	0500	FP-PRE FAB	0	100	0	0	1.00	UT	3,500.00	3,500.00	100	1955	1955	3	20	700	
2	0811	CONCRETE B	0	100	0	0	568.00	SF	5.20	5.20	100	1995	1995	3	68	2,008	
3	0855	CONC PAVER	0	100	0	0	609.00	SF	5.00	5.00	100	2000	2000	3	77	2,345	

LAND DESCRIPTION

TOTAL OB/XF 5,053

LN	USE CODE	CLS	LAND USE DESCRIPTION	CAP	RD	LOC ZONE	FRONT	DEPTH	TOT LND UTS	UNIT TYPE	DT	DPTH FACT	% COND	TOT ADJ	UNIT PRICE	ADJ UNIT PRICE	LAND VALUE	OTHER ADJUSTMENTS AND NOTES	YEAR	DENSITY	DECL	FRZ	YR	CONSRV
1	000100	C	RES	100	0006	R-1	75.00	158.00	1.00	LT		1.00	1.00	1.00	225,000.00	225,000.00	225,000							

REVIEW DATE 09/21/2022 BY TWA Total Acres: 0.00 Total Land Value: 225,000 Market: 0 Agricultural: 0 Common: 225,000 PRINTED 07/30/2025 BY SYS