LOT 55 OF FOREST HILLS #1 S/D
PBK 2/76 & PT OF LOTS 98,99,
117 & 118 OF OUTLOTS S/D OF

MOKRIS JEFFREY B & JENNIFER L REVOCABLE MARITAL TR
1856 HIGHLAND DRIVE
FERNANDINA BEACH, FL 32034

2025

00-00-31-128A-0055-0000

BUILDING CHARACTERISTICS

ELEMENT	CD	CONSTRUCTION
Exterior Wall	16	WD FR STUC 100
Roof Structur	08	IRREGULAR 100
Roof Cover	03	COMP SHNGL 100
Interior Wall	05	DRYWALL 100
Interior Floo	12	HARDWOOD 70
Interior Floo	15	HARDTILE 30
Air Condition	03	CENTRAL 100
Heating Type	04	AIR DUCTED 100
Bedrooms		4 100
Bathrooms		4.5 100
Frame	02	WOOD FRAME 100
Stories	2.	2. 100
Units		0 100
Occupancy	00	NONE 100
Quality	06	Quality Level 06
DOR CODE	0100	SINGLE FAMILY
MAP NUM		MKT AREA 01
NEIGHBORHOOD/LOC	1007.00	

AREA TYPE	TOTAL GROSS AREA	PCT OF BASE	YEAR	TOT ADJ AREA	SUBAREA MARKET VALUE
BAS	2,199	100	1993	2,199	327,616
FGR	724	55	1993	398	59,295
FOP	138	30	1993	41	6,108
FOP	138	30	1993	41	6,108
FOP	149	30	1993	45	6,705
FOP	152	30	1993	46	6,853
FOP	291	30	1993	87	12,962
FST	20	55	1993	11	1,639
FUS	2,169	100	1993	2,169	323,147
PTO	48	5	1993	2	298
TOTALS	6,495			5,132	764,586

MARKET ADJUSTMENTS

TYPE	MDL	EFF. AREA	TOT ADJ PTS	EFF. BASE RATE	REPL. COST NEW	AYB	EYB	ECON	FNCT		NORM	% COND
0900	01	5,132	128.2595	169.30	868,848	1992	2000	0	0	0	12.00	88.00

1 SNGL FAM – 100% - 2017 Heated Area: 4368 HX Base Yr 2017

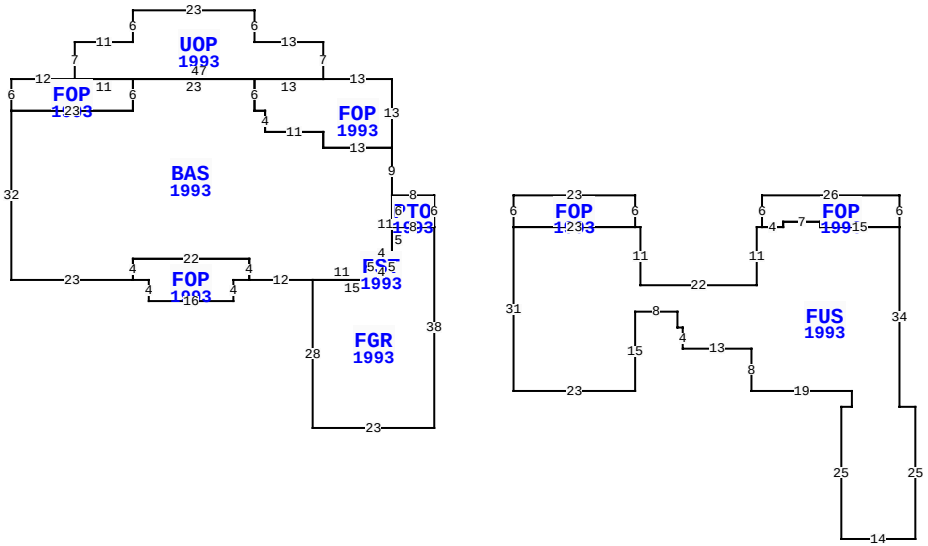

** This building has 11 Sub-Areas

1856 HIGHLAND DR, FERNANDINA BEACH

BLD DATE		LGL DATE	
XF DATE		LAND DATE	03/18/2024 MLU
INC DATE		AG DATE	

NASSAU COUNTY PROPERTY

PAGE 1 of 2 2

VALUATION SUMMARY

VALUATION BY		STANDARD
Tax Group: 2	Tax Dist:	
BUILDING MARKET VALUE		764,586
TOTAL MARKET OB/XF VALUE		59,729
TOTAL LAND VALUE - MARKET		650,000
TOTAL MARKET VALUE		1,474,315
SOH/AGL Deduction		373,611
ASSESSED VALUE		1,100,704
TOTAL EXEMPTION VALUE	HX HB	50,722
BASE TAXABLE VALUE		1,049,982
TOTAL JUST VALUE		1,474,315
NCON VALUE		0
INCOME VALUE		
PREVIOUS YEAR MKT VALUE		1,440,069

PERMIT NUM	DESCRIPTION	AMT	ISSUED
20080479	OTHER	2,200	03/25/2008
985096	REMODEL	10,850	03/03/1999
6855	NEW CONSTR	102,000	01/06/1992
6808	FOUNDATION	15,000	11/21/1991

SALES DATA

OFF RECORD Number	DATE	TYPE INST	Q / U	V / I	RSN CD	SALE PRICE
2690/978	1/19/2024	QC	U	I	11	100
GRANTOR: MOKRIS JENNIFER L & J						
GRANTEE: MOKRIS JEFFREY B &						
2075/0198	9/28/2016	WD	Q	I	01	1,100,000
GRANTOR: SHEFFIELD GEORGE WESL						
GRANTEE: MOKRIS JENNIFER L &						

BUILDING NOTES

BUILDING DIMENSIONS

PTO=[YR=1993] W8 BAS=[YR=1993] N9 FOP=[YR=1993] N13 W13 UOP=[YR=1993] N7 W13 N6 W23 S6 W11 S7 FOP=[YR=1993] W12 S6 E23 N6 W11 $ E47 $ W13 S6 E2 S4 E11 S3 E13 $ W13 N3 W11 N4 W2 N6 W23 S6 W23 S32 E23 FOP=[YR=1993] E3S4 E16 N4 E3 N4 W22 S4 $ N4 E22 S4 E12 FGR=[YR=1993] S28 E23 N38 W8 S5 FST=[YR=1993] W4S5E4N5$S5W15$ E11N5 E4N11 $S6E8N6$PTR=E15 FOP=[YR=1993] E23S6FUS=[YR=1993] E1S11E22 N11E1FOP=[YR=1993] N6 E26S6W15N1W7S1 W4$E4N1E7S1E15 S34E3S25W14N25 E2N3W19N8W13N4W1N3W8S15W23N31 E23$W23N6$ W15 $.

EXTRA FEATURES

LN	OB/XF CODE	DESCRIPTION	BLD	CAP	L	W	UNITS	UT	Adj R	ADJ UNIT PRICE	ORIG COND	YEAR ON	YEAR ACTUAL	Q	% COND	OB/XF MKT VALUE	NOTES
1	0504	FP-ELECTRI	0	100	0	0	1.00	UT	2,000.00	2,000.00	100	1992	1992	3	70	1,400	
2	1242	WD DECK A	0	100	0	0	608.00	SF	10.00	10.00	100	1991	1991	3	20	1,216	
3	1242	WD DECK A	0	100	12	6	72.00	SF	10.00	10.00	100	1991	1991	3	20	144	
4	0810	CONCRETE A	0	100	0	0	5,780.00	SF	6.50	6.50	100	1992	1992	3	62	23,293	
5	0300	BOAT DCK W	0	100	0	0	812.00	SF	40.00	40.00	100	1988	1988	3	20	6,496	
6	0303	FLT DOCK W	0	100	10	40	400.00	SF	26.00	26.00	100	2001	2001	3	28	2,912	
7	0310	AL GANG WY	0	100	0	0	20.00	LF	115.00	115.00	100	2001	2001	3	20	460	
8	0317	DCK PLNG W	0	100	0	0	7.00	UT	1,000.00	1,000.00	100	2001	2001	3	20	1,400	
9	0322	BOAT LFT L	0	100	0	0	1.00	UT	1,500.00	1,500.00	100	2001	2001	3	20	300	
10	0861	POOL GUNIT	0	100	0	0	612.00	SF	85.00	85.00	100	2001	2001	3	25	13,005	

TOTAL OB/XF 50,626

LAND DESCRIPTION

LN	USE CODE	CLS	LAND USE DESCRIPTION	CAP	RD	LOC ZONE	FRONT	DEPTH	TOT LND UTS	UNIT TYPE	DT	DPTH FACT	% COND	TOT ADJ	UNIT PRICE	ADJ UNIT PRICE	LAND VALUE	OTHER ADJUSTMENTS AND NOTES	YEAR	DENSITY	DECL	FRZ	YR	CONSRV
1	000131	C	RES CREEK	100		R-1	100.00	1,020.00	100.00	FF		1.00	1.00	1.00	6,500.00	6,500.00	650,000							

REVIEW DATE 07/10/2020 BY DJA Total Acres: 0.00 Total Land Value: 650,000 Market: 0 Agricultural: 0 Common: 650,000 PRINTED 07/30/2025 BY SYS

LOT 55 OF FOREST HILLS #1 S/D
PBK 2/76 & PT OF LOTS 98,99,
117 & 118 OF OUTLOTS S/D OF

MOKRIS JEFFREY B & JENNIFER L REVOCABLE MARITAL TR
1856 HIGHLAND DRIVE
FERNANDINA BEACH, FL 32034

2025

00-00-31-128A-0055-0000

NASSAU COUNTY PROPERTY

BUILDING CHARACTERISTICS

ELEMENT	CD	CONSTRUCTION

DOR CODE	0100	SINGLE FAMILY	
MAP NUM		MKT AREA	01
NEIGHBORHOOD/LOC	1007.00		

AREA TYPE	TOTAL GROSS AREA	PCT OF BASE	YEAR	TOT ADJ AREA	SUBAREA MARKET VALUE
TOTALS					

MARKET ADJUSTMENTS

TYPE	MDL	EFF. AREA	TOT ADJ PTS	EFF. BASE RATE	REPL. COST NEW	AYB	EYB	ECON	FNCT		NORM	% COND

VALUATION SUMMARY

VALUATION BY		STANDARD
Tax Group: 2	Tax Dist:	
BUILDING MARKET VALUE		764,586
TOTAL MARKET OB/XF VALUE		59,729
TOTAL LAND VALUE - MARKET		650,000
TOTAL MARKET VALUE		1,474,315
SOH/AGL Deduction		373,611
ASSESSED VALUE		1,100,704
TOTAL EXEMPTION VALUE	HX HB	50,722
BASE TAXABLE VALUE		1,049,982
TOTAL JUST VALUE		1,474,315
NCON VALUE		0
INCOME VALUE		
PREVIOUS YEAR MKT VALUE		1,440,069

PERMIT NUM	DESCRIPTION	AMT	ISSUED

SALES DATA

OFF RECORD Number	DATE	TYPE INST	Q / U	V / I	RSN CD	SALE PRICE
2690/978	1/19/2024	QC	U	I	11	100
GRANTOR: MOKRIS JENNIFER L & J						
GRANTEE: MOKRIS JEFFREY B &						
2075/0198	9/28/2016	WD	Q	I	01	1,100,000
GRANTOR: SHEFFIELD GEORGE WESL						
GRANTEE: MOKRIS JENNIFER L &						

BLD DATE		LGL DATE	
XF DATE		LAND DATE	03/18/2024 MLU
INC DATE		AG DATE	

BUILDING NOTES

BUILDING DIMENSIONS

EXTRA FEATURES

LN	OB/XF CODE	DESCRIPTION	BLD	CAP	L	W	UNITS	UT	Adj R	ADJ UNIT PRICE	ORIG COND	YEAR ON	YEAR ACTUAL	Q	% COND	OB/XF MKT VALUE	NOTES
11	0810	CONCRETE A	0	100	48	32	1,536.00	SF	6.50	6.50	100	1995	1995	3	68	6,789	
12	0845	KOOL DECK	0	100	0	0	280.00	SF	7.25	7.25	100	2001	2001	3	79	1,604	
13	0877	JACUZZI	0	100	0	0	1.00	UT	1,000.00	1,000.00	100	2008	2008	3	31	310	
14	0871	POOL HTR R	0	100	0	0	1.00	UT	2,000.00	2,000.00	100	2001	2001	3	20	400	

LAND DESCRIPTION

TOTAL OB/XF 9,103

LN	USE CODE	CLS	LAND USE DESCRIPTION	CAP	RD	LOC ZONE	FRONT	DEPTH	TOT LND UTS	UNIT TYPE	DT	DPTH FACT	% COND	TOT ADJ	UNIT PRICE	ADJ UNIT PRICE	LAND VALUE	OTHER ADJUSTMENTS AND NOTES	YEAR	DENSITY	DECL	FRZ	YR	CONSRV

REVIEW DATE 07/10/2020 BY DJA Total Acres: 0.00 Total Land Value: 650,000 Market: 0 Agricultural: 0 Common: 650,000 PRINTED 07/30/2025 BY SYS