BLOCK 1 LOT 8
AMELIA PARK TOWN CENTER
BLOCKS 1 & 4 PBK 8/185

SMITH KELLI KAEMMER
1795 AZALEA ST
FERNANDINA BEACH, FL 32034

2025

00-00-31-127P-0001-0080

BUILDING CHARACTERISTICS

ELEMENT	CD	CONSTRUCTION
Exterior Wall	10	ABOVE AVG 100
Roof Structur	03	GABLE/HIP 100
Roof Cover	03	COMP SHNGL 100
Interior Wall	05	DRYWALL 100
Interior Floo	08	SHT VINYL 50
Interior Floo	14	CARPET 50
Air Condition	03	CENTRAL 100
Heating Type	04	AIR DUCTED 100
Bedrooms		3 100
Bathrooms		2.5 100
Frame	02	WOOD FRAME 100
Stories	1.5	1.5 100
Units		0 100
Occupancy	00	NONE 100
Quality	06	Quality Level 06
DOR CODE	0100	SINGLE FAMILY
MAP NUM		MKT AREA 01
NEIGHBORHOOD/LOC	1031.100	

AREA TYPE	TOTAL GROSS AREA	PCT OF BASE	YEAR	TOT ADJ AREA	SUBAREA MARKET VALUE
BAS	1,508	100	2020	1,508	335,948
FGR	836	55	2020	460	102,477
FOP	136	30	2020	41	9,134
FOP	518	30	2020	155	34,530
FUS	780	100	2020	780	173,767
STR	60	10	2020	6	1,337
TOTALS	3,838			2,950	657,194

MARKET ADJUSTMENTS

TYPE	MDL	EFF. AREA	TOT ADJ PTS	EFF. BASE RATE	REPL. COST NEW	AYB	EYB	ECON	FNCT		NORM	% COND
0500	11	2,950	143.1432	226.17	667,202	2020	2020	0	0	0	1.50	98.50

1 SFR CUST – 100% - 2021 Heated Area: 2288 HX Base Yr 2021

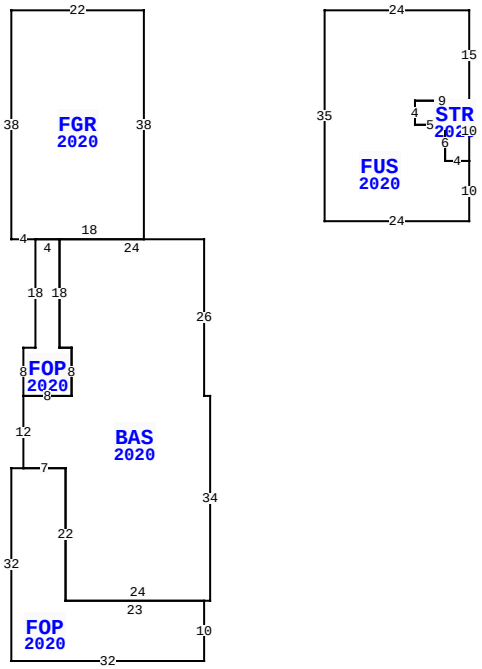

1795 AZALEA ST, FERNANDINA BEACH

BLD DATE		LGL DATE	
XF DATE		LAND DATE	03/13/2024 MLU
INC DATE		AG DATE	

NASSAU COUNTY PROPERTY

PAGE 1 of 1 2

VALUATION SUMMARY

VALUATION BY		STANDARD
Tax Group: 2	Tax Dist:	
BUILDING MARKET VALUE		657,194
TOTAL MARKET OB/XF VALUE		3,175
TOTAL LAND VALUE - MARKET		189,000
TOTAL MARKET VALUE		849,369
SOH/AGL Deduction		407,338
ASSESSED VALUE		442,031
TOTAL EXEMPTION VALUE	HX HB WX	55,722
BASE TAXABLE VALUE		386,309
TOTAL JUST VALUE		849,369
NCON VALUE		0
INCOME VALUE		
PREVIOUS YEAR MKT VALUE		757,033

PERMIT NUM	DESCRIPTION	AMT	ISSUED
20190535	CO ISSUED	0	04/21/2020
20190535	NEW CONSTR	0	09/26/2019

SALES DATA

OFF RECORD Number	DATE	TYPE INST	Q / U	V / I	RSN CD	SALE PRICE
2355/1840	4/21/2020	WD	Q	I	02	607,600
GRANTOR: RIVERSIDE HOMES OF NO						
GRANTEE: SMITH LAWRENCE NEAL						
2180/1395	2/23/2018	SW	Q	V	05	1,000,000
GRANTOR: AMELIA PARK TND LLC						
GRANTEE: RIVERSIDE HOMES OF						

BUILDING NOTES

BUILDING DIMENSIONS

FGR=[YR=2020] W22 S38 E4 FOP=[YR=2020] S18 W2 S8BAS=[YR=2020] S12 FOP=[YR=2020] W2 S32 E32 N10 W23 N22 W7 $ E7 S22 E24 N34 W1 N26 W24 S18 E2 S8 W8 $ E8 N8 W2 N18 W4 $ E18 N38 $ PTR= E30 FUS=[YR=2020] E24 S15STR=[YR=2020] S10 W4 N6 W5 N4 E9 $ W9 S4 E5 S6 E4 S10 W24 N35 $ W30 $.

EXTRA FEATURES

LN	OB/XF CODE	DESCRIPTION	BLD	CAP	L	W	UNITS	UT	Adj R	ADJ UNIT PRICE	ORIG COND	YEAR ON	YEAR ACTUAL	Q	% COND	OB/XF MKT VALUE	NOTES
1	0855	CONC PAVER	0	100	0	0	324.00	SF	10.00	10.00	100	2020	2020	3	98	3,175	

LAND DESCRIPTION

TOTAL OB/XF 3,175

LN	USE CODE	CLS	LAND USE DESCRIPTION	CAP	RD	LOC ZONE	FRONT	DEPTH	TOT LND UTS	UNIT TYPE	DT	DPTH FACT	% COND	TOT ADJ	UNIT PRICE	ADJ UNIT PRICE	LAND VALUE	OTHER ADJUSTMENTS AND NOTES	YEAR	DENSITY	DECL	FRZ	YR	CONSRV
1	000100	C	RES	100		R-2	0.00	0.00	54.00	FF		1.00	1.00	1.00	3,500.00	3,500.00	189,000							

REVIEW DATE 10/09/2020 BY RK Total Acres: 0.00 Total Land Value: 189,000 Market: 0 Agricultural: 0 Common: 189,000 PRINTED 07/30/2025 BY SYS