BLOCK 1 LOT 7
AMELIA PARK TOWN CENTER
BLOCKS 1 & 4 PBK 8/185

JOZSA BRADDEN & CRYSTAL TRUST/JOZSA BRADDEN A TRUS
1791 AZALEA STREET
FERNANDINA BEACH, FL 32034

2025

00-00-31-127P-0001-0070

BUILDING CHARACTERISTICS

ELEMENT	CD	CONSTRUCTION
Exterior Wall	10	ABOVE AVG 100
Roof Structur	03	GABLE/HIP 100
Roof Cover	03	COMP SHNGL 100
Interior Wall	05	DRYWALL 100
Interior Floo	11	CLAY TILE 70
Interior Floo	14	CARPET 30
Air Condition	03	CENTRAL 100
Heating Type	04	AIR DUCTED 100
Bedrooms		4 100
Bathrooms		3.5 100
Frame	02	WOOD FRAME 100
Stories	1.5	1.5 100
Units		0 100
Occupancy	00	NONE 100
Quality	06	Quality Level 06
DOR CODE	0100	SINGLE FAMILY
MAP NUM		MKT AREA 01
NEIGHBORHOOD/LOC	1031.100	

AREA TYPE	TOTAL GROSS AREA	PCT OF BASE	YEAR	TOT ADJ AREA	SUBAREA MARKET VALUE
BAS	1,292	100	2020	1,292	326,885
FGR	494	55	2020	272	68,818
FOP	128	30	2020	38	9,615
FSP	147	40	2020	59	14,928
FUS	1,074	100	2020	1,074	271,730
PTO	20	5	2020	1	253
STP	6	10	2020	1	253
STR	48	10	2020	5	1,265
TOTALS	3,209			2,742	693,745

MARKET ADJUSTMENTS

TYPE	MDL	EFF. AREA	TOT ADJ PTS	EFF. BASE RATE	REPL. COST NEW	AYB	EYB	ECON	FNCT		NORM	% COND
0500	11	2,742	162.5674	256.86	704,310	2020	2020	0	0	0	1.50	98.50

1 SFR CUST – 100% - 2021 Heated Area: 2366 HX Base Yr 2021

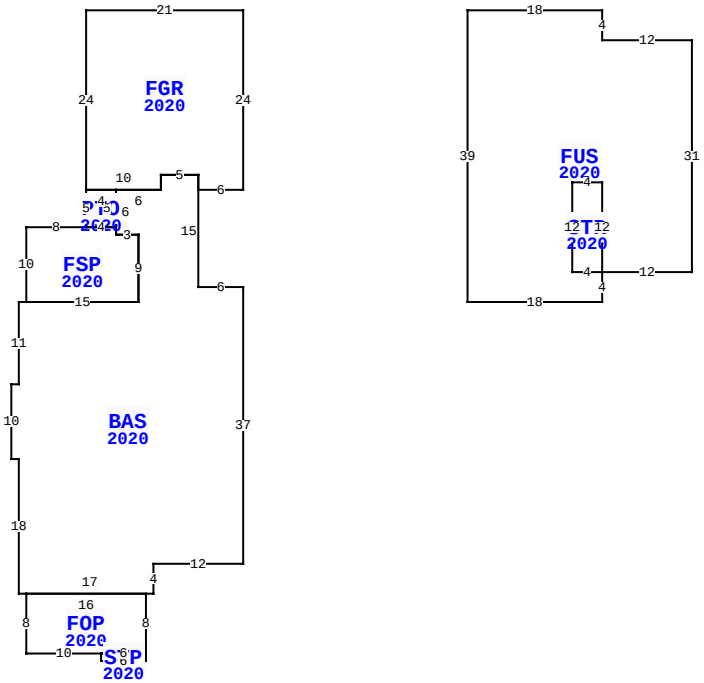

1791 AZALEA ST, FERNANDINA BEACH

BLD DATE		LGL DATE	
XF DATE		LAND DATE	03/13/2024 MLU
INC DATE		AG DATE	

NASSAU COUNTY PROPERTY

PAGE 1 of 1 2

VALUATION SUMMARY

VALUATION BY		STANDARD
Tax Group: 2	Tax Dist:	
BUILDING MARKET VALUE		693,745
TOTAL MARKET OB/XF VALUE		7,281
TOTAL LAND VALUE - MARKET		157,500
TOTAL MARKET VALUE		858,526
SOH/AGL Deduction		286,386
ASSESSED VALUE		572,140
TOTAL EXEMPTION VALUE	HX HB	50,722
BASE TAXABLE VALUE		521,418
TOTAL JUST VALUE		858,526
NCON VALUE		0
INCOME VALUE		
PREVIOUS YEAR MKT VALUE		761,086

PERMIT NUM	DESCRIPTION	AMT	ISSUED
20190693	NEW CONSTR	311,148	12/30/2019

SALES DATA

OFF RECORD Number	DATE	TYPE INST	Q U	V I	RSN CD	SALE PRICE
2442/1077	12/10/2020	QC	U	I	11	100
GRANTOR: JOZSA BRADDEN A & CYR						
GRANTEE: JOZSA BRADDEN A & C						
2381/1612	8/04/2020	WD	Q	I	02	598,200
GRANTOR: RIVERSIDE HOMES OF NO						
GRANTEE: JOZSA CRYSTAL R & B						

BUILDING NOTES

BUILDING DIMENSIONS

FGR=[YR=2020] W21 S24 PTO=[YR=2020] S5 FSP=[YR=2020] W8 S10 BAS=[YR=2020] W1 S11 W1 S10 E1 S18 E1 FOP=[YR=2020] S8 E10 STP=[YR=2020] S1 E6 N1 W6 $ E6 N8 W16$ E17 N4 E12 N37 W6 N15W5 S2 W6 S6 E3 S9 W15 $ E15 N9 W3 N1 W4$ E4 N5 W4 $ E10 N2 E5 S2 E6 N24 $ PTR= E30 FUS=[YR=2020] E18 S4 E12 S31 W12 STR=[YR=2020] N12 W4 S12 E4 $ S4 W18 N39 $ W30 $.

EXTRA FEATURES

LN	OB/XF CODE	DESCRIPTION	BLD	CAP	L	W	UNITS	UT	Adj R	ADJ UNIT PRICE	ORIG COND	YEAR ON	YEAR ACTUAL	Q	% COND	OB/XF MKT VALUE	NOTES
1	0855	CONC PAVER	0	100	0	0	743.00	SF	10.00	10.00	100	2020	2020	3	98	7,281	

LAND DESCRIPTION

TOTAL OB/XF 7,281

LN	USE CODE	CLS	LAND USE DESCRIPTION	CAP	RD	LOC ZONE	FRONT	DEPTH	TOT LND UTS	UNIT TYPE	DT	DPTH FACT	% COND	TOT ADJ	UNIT PRICE	ADJ UNIT PRICE	LAND VALUE	OTHER ADJUSTMENTS AND NOTES	YEAR	DENSITY	DECL	FRZ	YR	CONSRV
1	000100	C	RES	100		R-2	0.00	0.00	45.00	FF		1.00	1.00	1.00	3,500.00	3,500.00	157,500							

REVIEW DATE 10/09/2020 BY RK Total Acres: 0.00 Total Land Value: 157,500 Market: 0 Agricultural: 0 Common: 157,500 PRINTED 07/30/2025 BY SYS