PT OF LOT 9 (S-3)
IN OR 2294/1867
FIRST COAST ESTATES PB 5/205

THE FIRST PORT CITY BANK
400 WEST SHOTWELL ST
BAINBRIDGE, GA 39818

2025

00-00-31-127A-0009-0030

BUILDING CHARACTERISTICS

ELEMENT	CD	CONSTRUCTION
Exterior Wall	16	WD FR STUC 100
Roof Structur	04	WOOD TRUSS 100
Roof Cover	03	COMP SHNGL 100
Interior Wall	05	DRYWALL 100
Interior Floo	14	CARPET 60
Interior Floo	13	LVT/LAMNT 40
Ceiling	02	F.NOT SUS 100
Air Condition	03	CENTRAL 100
Heating Type	04	AIR DUCTED 100
Fixtures		11 100
Frame	02	WOOD FRAME 100
Story Height		10 100
RMS		36 100
Stories	3.	3. 100
Units		0 100
Occupancy	OO	OWNER OCC 100
Quality	03	Quality Level 03
DOR CODE	2300	FINANCIAL BLDG
MAP NUM		MKT AREA 01
NEIGHBORHOOD/LOC	2004.00	

AREA TYPE	TOTAL GROSS AREA	PCT OF BASE	YEAR	TOT ADJ AREA	SUBAREA MARKET VALUE
BAS	3,978	100	1993	3,978	333,837
BAS	66	100	2020	66	5,539
CAN	598	30	1993	179	15,022
CAN	60	30	1994	18	1,510
CAN	60	30	1994	18	1,510
CAN	99	30	2020	30	2,518
FUS	1,411	100	1993	1,411	118,413
FUS	3,894	100	1993	3,894	326,787
TOTALS	10,166			9,594	805,136

MARKET ADJUSTMENTS

TYPE	MDL	EFF. AREA	TOT ADJ PTS	EFF. BASE RATE	REPL. COST NEW	AYB	EYB	ECON	FNCT	DP	NORM	% COND
1701	04	9,594	81.8235	114.96	1,102,926	1988	2000	0	0	4	23.00	73.00

1 OFFICE – 0% - 0 Heated Area: 9349 HX Base Yr

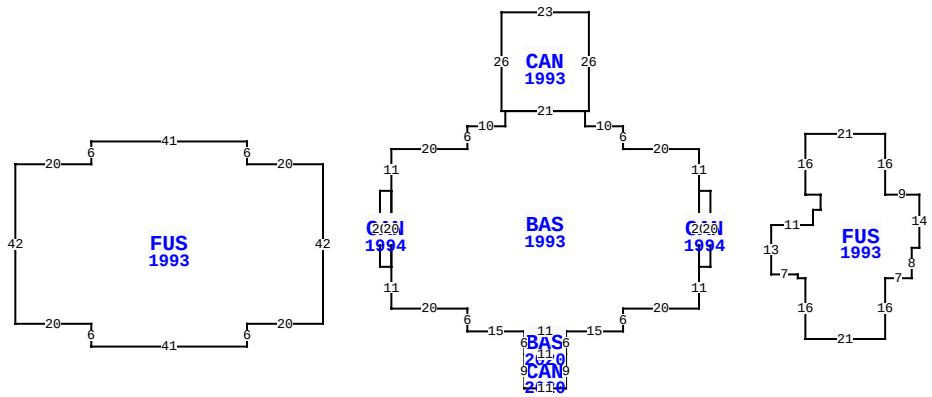

1890 S 14TH ST, FERNANDINA BEACH

BLD DATE	06/30/2025	KWX	LGL DATE	
XF DATE	06/30/2025	KWX	LAND DATE	04/17/2025 DC
INC DATE			AG DATE	

NASSAU COUNTY PROPERTY

PAGE 1 of 1 2

VALUATION SUMMARY

VALUATION BY	DIRECT_CAP
Tax Group: 2	Tax Dist:
BUILDING MARKET VALUE	615,928
TOTAL MARKET OB/XF VALUE	0
TOTAL LAND VALUE - MARKET	0
TOTAL MARKET VALUE	769,910
SOH/AGL Deduction	0
ASSESSED VALUE	769,910
TOTAL EXEMPTION VALUE	0
BASE TAXABLE VALUE	769,910
TOTAL JUST VALUE	769,910
NCON VALUE	0
INCOME VALUE	769,910
PREVIOUS YEAR MKT VALUE	769,910

FIRST PORT CITY BANK: 2025KW

PERMIT NUM	DESCRIPTION	AMT	ISSUED
20200011	REPAIR/RRF	5,000	03/24/2020
20200007	REMODEL	180,000	03/06/2020
20190018	DEMOLITION	10,000	10/30/2019
20190011	REROOF	0	06/14/2019
20062613	ELEC OTHER	2,500	11/28/2006
20042406	REPAIR/RRF	29,000	12/22/2004

SALES DATA

OFF RECORD Number	DATE	TYPE INST	Q U	V I	RSN CD	SALE PRICE
2294/1867	7/31/2019	SW	Q	I	01	625,000
GRANTOR: DUNN JFM LLC & DUNN M						
GRANTEE: THE FIRST PORT CITY						
2130/1160	6/15/2017	SW	Q	I	01	395,000
GRANTOR: CRIMSON 14TH ST HOLDI						
GRANTEE: DUNN JFM LLC & DUNN						

BUILDING NOTES

EXTRA FEATURES

LN	OB/XF CODE	DESCRIPTION	BLD	CAP	L	W	UNITS	UT	Adj R	ADJ UNIT PRICE	ORIG COND	YEAR ON	YEAR ACTUAL	Q	% COND	OB/XF MKT VALUE	NOTES
1	2021	BANK WINDW	0	0	0	0	1.00	UT	6,000.00	6,000.00	100	1988	1988	3	83	4,980	
2	2013	RVLT DR10"	0	0	0	0	1.00	UT	30,000.00	30,000.00	100	1988	1988	3	83	24,900	
3	4950	BOLLARD	0	0	0	0	10.00	UT	100.00	100.00	100	2020	2020	3	100	1,000	
4	0811	CONCRETE B	0	0	0	0	396.00	SF	5.20	5.20	100	2020	2020	3	98	2,018	

BUILDING DIMENSIONS

BAS=[YR=1993;ORIG=-3,0] N11 W20 N6 W10 N4 W21 S4 W10 S6 W20 S11 S20 S11 E20 S6 E15 E11 E15 N6 E20 N11 N20 $
FUS=[YR=1993;LABEL=2nd FLR;ORIG=-102,-7] W20 N6 W41 S6 W20 S42 E20 S6 E41 N6 E20 N42 $
FUS=[YR=1993;LABEL=3rd FLR;ORIG=25,-15] E21 S16 E9 S14 W2 S8 W7 S16 W21 N16 W2 N1 W7 N13 E11 N4 E2 N4 W4 N16 $
CAN=[YR=1993;LABEL=drive thru;ORIG=-33,-21] E1 N26 W23 S26 E1 E21 $
CAN=[YR=2020;ORIG=-49,43] S9 E11 N9 W11 $
BAS=[YR=2020;ORIG=-49,37] S6 E11 N6 W11 $
CAN=[YR=1994;ORIG=0,0] W3 S20 E3 N20 $
CAN=[YR=1994;ORIG=-84,0] W3 S20 E3 N20 $

LAND DESCRIPTION

TOTAL OB/XF 32,898

LN	USE CODE	CLS	LAND USE DESCRIPTION	CAP	RD	LOC ZONE	FRONT	DEPTH	TOT LND UTS	UNIT TYPE	DT	DPTH FACT	% COND	TOT ADJ	UNIT PRICE	ADJ UNIT PRICE	LAND VALUE	OTHER ADJUSTMENTS AND NOTES	YEAR	DENSITY	DECL	FRZ	YR	CONSRV
1	002300	C	FINANCIAL	0	0003	C-1	0.00	0.00	1.00	UT		1.00	1.00	1.00	562,700.00	562,700.00	562,700							

REVIEW DATE 06/30/2025 BY KWX Total Acres: 0.00 Total Land Value: 153,982 Market: 0 Agricultural: 0 Common: 0 PRINTED 07/30/2025 BY SYS