LOT 12
IN OR 1389/1862
FERREIRA REPLAT OF FDNA BEACH

CARR PETER J & CAROLYN S
1033 N FLETCHER AV
FERNANDINA BEACH, FL 32034

2025

00-00-31-126B-0012-0000

BUILDING CHARACTERISTICS

ELEMENT	CD	CONSTRUCTION
Exterior Wall	10	ABOVE AVG 70
Exterior Wall	23	REINF CONC 30
Roof Structur	03	GABLE/HIP 100
Roof Cover	12	MODULAR MT 100
Interior Wall	05	DRYWALL 100
Interior Floo	12	HARDWOOD 70
Interior Floo	15	HARDTILE 30
Air Condition	03	CENTRAL 100
Heating Type	04	AIR DUCTED 100
Bedrooms		3 100
Bathrooms		4.5 100
Frame	07	SPECIAL 100
Stories	3.5	3.5 100
Units		0 100
BUD8 Adjustme	02	DIST FB 100
Occupancy	00	NONE 100
Quality	04	Quality Level 04
DOR CODE	0100	SINGLE FAMILY
MAP NUM		MKT AREA 01
NEIGHBORHOOD/LOC	1056.00	

AREA TYPE	TOTAL GROSS AREA	PCT OF BASE	YEAR	TOT ADJ AREA	SUBAREA MARKET VALUE
BAS	571	100	2007	571	79,921
FGR	635	55	2007	349	48,848
FOP	12	30	2007	4	560
FOP	63	30	2007	19	2,660
FOP	96	30	2007	29	4,059
FOP	96	30	2007	29	4,059
FOP	135	30	2007	40	5,598
FOP	252	30	2007	76	10,638
FST	30	55	2007	16	2,239
FUS	80	100	2007	80	11,197
TOTALS	4,500			3,707	518,853

MARKET ADJUSTMENTS

TYPE	MDL	EFF. AREA	TOT ADJ PTS	EFF. BASE RATE	REPL. COST NEW	AYB	EYB	ECON	FNCT		NORM	% COND
0900	01	3,707	114.8175	151.56	561,833	2007	2008	0	0	0	7.65	92.35

1 SNGL FAM – 100% - 2008 Heated Area: 3141 HX Base Yr 2008

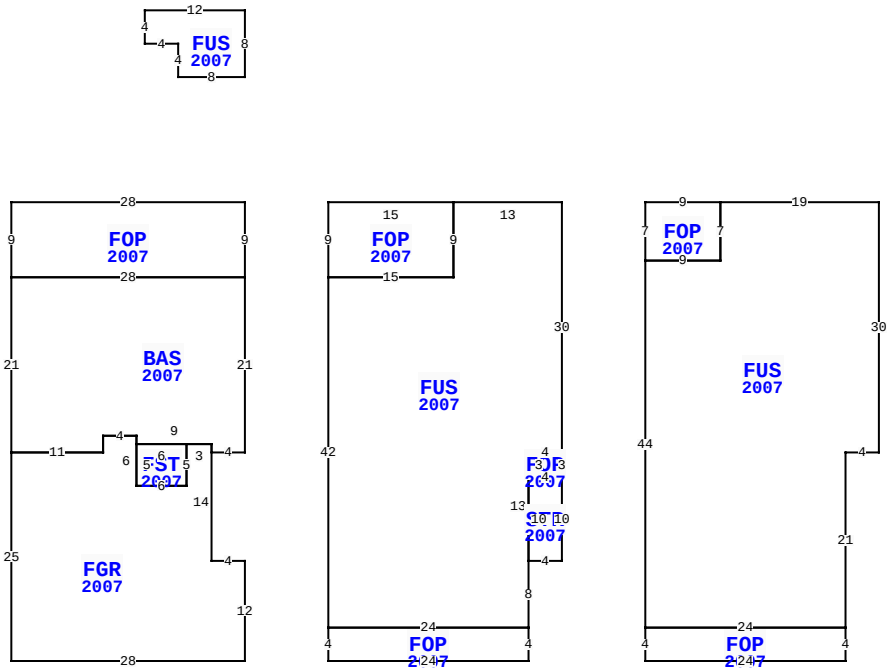

** This building has 13 Sub-Areas

1033 N FLETCHER AVE, FERNANDINA BEACH

BLD DATE		LGL DATE	
XF DATE		LAND DATE	
INC DATE		AG DATE	

NASSAU COUNTY PROPERTY

PAGE 1 of 1 2

VALUATION SUMMARY

VALUATION BY		STANDARD
Tax Group: 2	Tax Dist:	
BUILDING MARKET VALUE		518,853
TOTAL MARKET OB/XF VALUE		39,965
TOTAL LAND VALUE - MARKET		300,000
TOTAL MARKET VALUE		858,818
SOH/AGL Deduction		412,722
ASSESSED VALUE		446,096
TOTAL EXEMPTION VALUE	HX HB	50,722
BASE TAXABLE VALUE		395,374
TOTAL JUST VALUE		858,818
NCON VALUE		0
INCOME VALUE		
PREVIOUS YEAR MKT VALUE		834,476

PERMIT NUM	DESCRIPTION	AMT	ISSUED
20111551	H/AC	8,500	09/07/2011
20101093	XFOB	1,500	07/02/2010
20100450	REMODEL	25,000	03/16/2010
20081746	REPAIR/RRF	7,500	11/25/2008
20072233	GAS	1,716	12/14/2007
20071044	GAS	1,495	06/11/2007

SALES DATA

OFF RECORD Number	DATE	TYPE INST	Q / U	V / I	RSN CD	SALE PRICE
1389/1862	2/17/2006	WD	Q	I		425,000
GRANTOR: GALLONI JACQUELYN S &						
GRANTEE: CARR PETER J & CARO						
0630/1100	7/11/2001	QC	Q	I	01	100
GRANTOR: GALLONI JACQUELYN S						
GRANTEE: GALLONI J S & R J						

BUILDING NOTES

BUILDING DIMENSIONS

FOP=[YR=2007] W28S9 BAS=[YR=2007] S21 FGR=[YR=2007] S25 E28 N12W4N14W3 FST=[YR=2007] W6S5E6N5$S5W6N6W4S2W11 $E11N2E4S1E9S1E4N21 W28$ E28N9 $ PTR=E10 FOP=[YR=2007] S9 FUS=[YR=2007] S42 FOP=[YR=2007] S4E24N4W24$E24N8 STR=[YR=2007] E4N10 FOP=[YR=2007] N3W4S3E4 $W4S10$N13E4N30W13 S9W15$ E15 N9W15$ W10$ PTR=E48 FOP=[YR=2007] S7 FUS=[YR=2007] S44 FOP=[YR=2007] S4 E24N4 W24$E24N21E4N30W19S7W9$E9N7W9$ W48$ PTR=N15 FUS=[YR=2007] N8W12S4E4 S4E8$ S15$.

EXTRA FEATURES

LN	OB/XF CODE	DESCRIPTION	BLD	CAP	L	W	UNITS	UT	Adj R	ADJ UNIT PRICE	ORIG COND	YEAR ON	YEAR ACTUAL	Q	% COND	OB/XF MKT VALUE	NOTES
1	0409	ELEVATOR R	0	100	0	0	1.00	UT	13,260.00	13,260.00	100	2007	2007	3	100	13,260	
2	0855	CONC PAVER	0	100	0	0	1,600.00	SF	10.00	10.00	100	2007	2007	3	87	13,920	
3	0600	SUMMER KIT	0	100	0	0	1.00	UT	5,000.00	5,000.00	100	2007	2007	3	27	1,350	
4	0500	FP-PRE FAB	0	100	0	0	1.00	UT	3,500.00	3,500.00	100	2007	2007	3	90	3,150	
5	0479	VF PICKET	0	100	0	0	92.00	LF	16.00	16.00	100	2007	2007	3	69	1,016	
6	0855	CONC PAVER	0	100	0	0	474.00	SF	10.00	10.00	100	2008	2008	3	88	4,171	
7	0855	CONC PAVER	0	100	0	0	352.00	SF	10.00	10.00	100	2008	2008	3	88	3,098	

LAND DESCRIPTION

TOTAL OB/XF 39,965

LN	USE CODE	CLS	LAND USE DESCRIPTION	CAP	RD	LOC ZONE	FRONT	DEPTH	TOT LND UTS	UNIT TYPE	DT	DPTH FACT	% COND	TOT ADJ	UNIT PRICE	ADJ UNIT PRICE	LAND VALUE	OTHER ADJUSTMENTS AND NOTES	YEAR	DENSITY	DECL	FRZ	YR	CONSRV
1	000100	C	RES	100	0006	R-2	50.00	100.00	50.00	FF		1.00	1.00	1.00	6,000.00	6,000.00	300,000							

REVIEW DATE 05/12/2019 BY KBA Total Acres: 0.00 Total Land Value: 300,000 Market: 0 Agricultural: 0 Common: 300,000 PRINTED 07/30/2025 BY SYS