LOT 8 & S 12.5 FT OF LOT 9
IN OR 1708/220
FERREIRA REPLAT OF FDNA BEACH

WARREN FREDERICK L & POLLY P
385 LONDONBERRY ROAD
ATLANTA, GA 30327

2025

00-00-31-126B-0008-0000

BUILDING CHARACTERISTICS

ELEMENT	CD	CONSTRUCTION
Exterior Wall	23	REINF CONC 50
Exterior Wall	31	HARDIE BRD 50
Roof Structur	03	GABLE/HIP 100
Roof Cover	03	COMP SHNGL 100
Interior Wall	03	PLASTER 50
Interior Wall	05	DRYWALL 50
Interior Floo	15	HARDTILE 100
Air Condition	03	CENTRAL 100
Heating Type	04	AIR DUCTED 100
Bedrooms		3 100
Bathrooms		2 100
Frame	03	MASONRY 100
Stories	2.	2. 100
Units		0 100
BUD8 Adjustme	02	DIST FB 100
Occupancy	00	NONE 100
Quality	03	Quality Level 03
DOR CODE	0100	SINGLE FAMILY
MAP NUM		MKT AREA 01
NEIGHBORHOOD/LOC	1056.00	

AREA TYPE	TOTAL GROSS AREA	PCT OF BASE	YEAR	TOT ADJ AREA	SUBAREA MARKET VALUE
BAL	355	15	2014	53	7,953
BAL	80	15	2022	12	1,800
BAS	750	100	1993	750	112,538
FSP	450	40	2022	180	27,009
FUS	750	100	1993	750	112,538
PTO	32	5	2014	2	300
STR	44	10	2014	4	600
STR	80	10	2022	8	1,200
UOP	280	20	2014	56	8,403
UST	66	45	2014	30	4,501
TOTALS	2,887			1,845	276,844

MARKET ADJUSTMENTS

TYPE	MDL	EFF. AREA	TOT ADJ PTS	EFF. BASE RATE	REPL. COST NEW	AYB	EYB	ECON	FNCT		NORM	% COND
0900	01	1,845	129.0000	170.28	314,167	1962	2000	0	0	0	11.88	88.12

1 SNGL FAM – 0% - 0 Heated Area: 1500 HX Base Yr

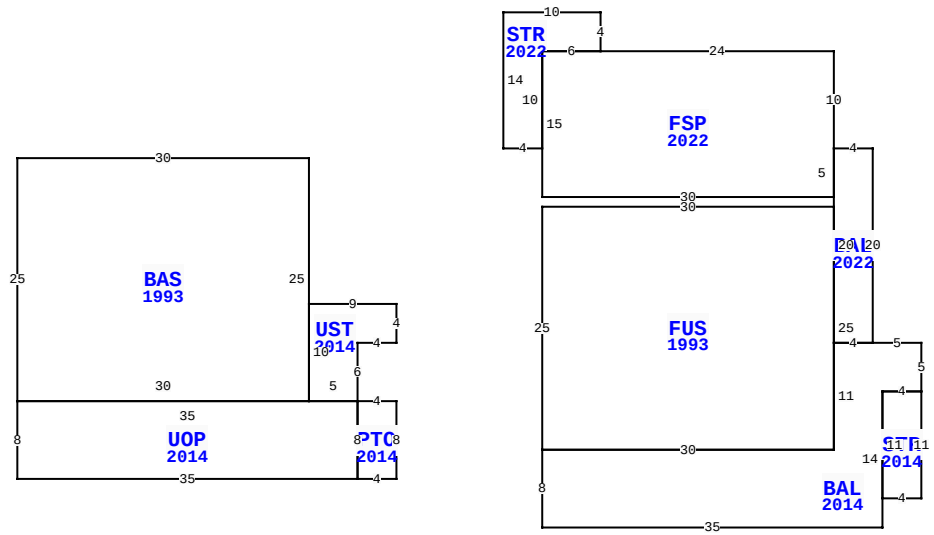

1025 N FLETCHER AVE, FERNANDINA BEACH

BLD DATE		LGL DATE	
XF DATE		LAND DATE	
INC DATE		AG DATE	

NASSAU COUNTY PROPERTY

PAGE 1 of 1 2

VALUATION SUMMARY

VALUATION BY	STANDARD
Tax Group: 2	Tax Dist:
BUILDING MARKET VALUE	276,844
TOTAL MARKET OB/XF VALUE	6,928
TOTAL LAND VALUE - MARKET	378,000
TOTAL MARKET VALUE	661,772
SOH/AGL Deduction	86,454
ASSESSED VALUE	575,318
TOTAL EXEMPTION VALUE	0
BASE TAXABLE VALUE	575,318
TOTAL JUST VALUE	661,772
NCON VALUE	0
INCOME VALUE	
PREVIOUS YEAR MKT VALUE	648,661

PERMIT NUM	DESCRIPTION	AMT	ISSUED
20210697	REPAIR/RRF	0	09/03/2021
20200621	ADDITION	0	02/12/2021
20141587	STORAGE	16,000	07/21/2014
20141569	DEMODECK	2,000	07/18/2014
20100984	XFOB	600	06/11/2010
20100710	H/AC	3,100	05/03/2010

SALES DATA

OFF RECORD Number	DATE	TYPE INST	Q U /	V I /	RSN CD	SALE PRICE
1708/0220	10/29/2010	WD	Q	I	01	310,000
GRANTOR: CARTER MARILYN FAYE &						
GRANTEE: WARREN FREDERICK L						
1487/0233	3/22/2007	WD	Q	I		350,000
GRANTOR: DICKMAN LAWRENCE A &						
GRANTEE: CARTER MARILYN FAYE						

BUILDING NOTES

BUILDING DIMENSIONS

BAS=[YR=1993] W30 S25 UOP=[YR=2014] S8 E35 PTO=[YR=2014] E4 N8 W4 UST=[YR=2014] N6 E4 N4 W9 S10 E5$ S8$ N8 W35$ E30 N25$ PTR=E20 N15 STR=[YR=2022] E10 S4 FSP=[YR=2022] E24 S10 BAL=[YR=2022] E4 S20 BAL=[YR=2014] E5 S5 STR=[YR=2014] S11 W4 N11 E4$ W4 S14 W35 N8 FUS=[YR=1993] N25 E30 S25 W30$ E30 N11 E4$ W4 N20$ S5 W30 N15 E6$ W6 S10 W4 N14$ S15 W20$.

EXTRA FEATURES

LN	OB/XF CODE	DESCRIPTION	BLD	CAP	L	W	UNITS	UT	Adj R	ADJ UNIT PRICE	ORIG COND	YEAR ON	YEAR ACTUAL	Q	% COND	OB/XF MKT VALUE	NOTES
1	0810	CONCRETE A	0	0	0	0	1,200.00	SF	6.50	6.50	100	2003	2003	3	82	6,396	
2	0810	CONCRETE A	0	0	0	0	87.00	SF	6.50	6.50	100	2014	2014	3	94	532	

LAND DESCRIPTION

TOTAL OB/XF 6,928

LN	USE CODE	CLS	LAND USE DESCRIPTION	CAP	RD	LOC ZONE	FRONT	DEPTH	TOT LND UTS	UNIT TYPE	DT	DPTH FACT	% COND	TOT ADJ	UNIT PRICE	ADJ UNIT PRICE	LAND VALUE	OTHER ADJUSTMENTS AND NOTES	YEAR	DENSITY	DECL	FRZ	YR	CONSRV
1	000100	C	RES	0	0006	R-2	63.00	100.00	63.00	FF		1.00	1.00	1.00	6,000.00	6,000.00	378,000							

REVIEW DATE 09/21/2022 BY TW Total Acres: 0.00 Total Land Value: 378,000 Market: 0 Agricultural: 0 Common: 378,000 PRINTED 07/30/2025 BY SYS