LOT 2 EX S1/2 (N1/2 AKA LOT 2)
IN OR 2167/630
DUNEWOOD SUB PB 5/182

RUBIO PEDRO J & EYAN K
7419 W MAGIC MOUNTAIN LANE
ROUND ROCK, TX 78681

2025

00-00-31-1235-0002-0010

NASSAU COUNTY PROPERTY

BUILDING CHARACTERISTICS

ELEMENT	CD	CONSTRUCTION
Exterior Wall	05	AVERAGE 100
Roof Structur	03	GABLE/HIP 100
Roof Cover	03	COMP SHNGL 100
Interior Wall	05	DRYWALL 100
Interior Floo	14	CARPET 80
Interior Floo	11	CLAY TILE 20
Air Condition	03	CENTRAL 100
Heating Type	04	AIR DUCTED 100
Bedrooms		3 100
Bathrooms		3 100
Frame	02	WOOD FRAME 100
Stories	2.	2. 100
Units		0 100
Quality	03	Quality Level 03
DOR CODE	0100	SINGLE FAMILY
MAP NUM		MKT AREA 01
NEIGHBORHOOD/LOC	1043.00	

AREA TYPE	TOTAL GROSS AREA	PCT OF BASE	YEAR	TOT ADJ AREA	SUBAREA MARKET VALUE
BAS	770	100	2000	770	96,309
FGR	250	55	2000	138	17,261
FSP	88	40	2015	35	4,378
FUS	864	100	2000	864	108,067
PTO	200	5	2000	10	1,251
TOTALS	2,172			1,817	227,264

MARKET ADJUSTMENTS

TYPE	MDL	EFF. AREA	TOT ADJ PTS	EFF. BASE RATE	REPL. COST NEW	AYB	EYB	ECON	FNCT		NORM	% COND
0320	11	1,817	141.7320	141.73	257,523	2000	2000	0	0	0	11.75	88.25

1 TOWNHOUSE – 0% - 0 Heated Area: 1634 HX Base Yr

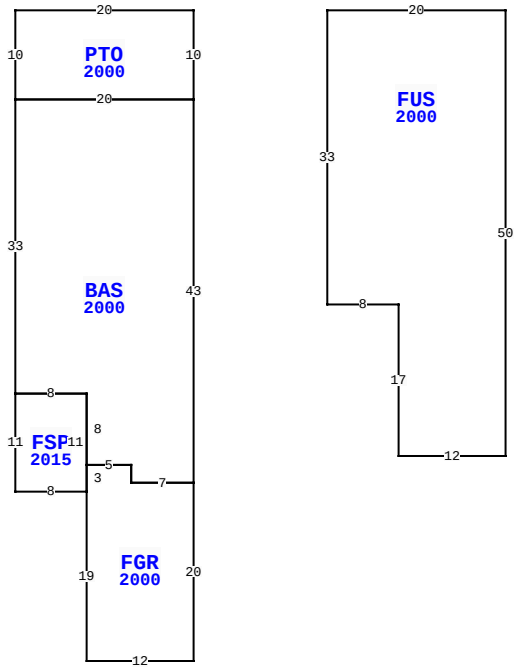

2318 1ST AV, FERNANDINA BEACH

BLD DATE		LGL DATE	
XF DATE		LAND DATE	05/08/2025 MLU
INC DATE		AG DATE	

NASSAU COUNTY PROPERTY — VALUATION SUMMARY

VALUATION BY	STANDARD
Tax Group: 2	Tax Dist:
BUILDING MARKET VALUE	227,264
TOTAL MARKET OB/XF VALUE	2,641
TOTAL LAND VALUE - MARKET	180,000
TOTAL MARKET VALUE	409,905
SOH/AGL Deduction	0
ASSESSED VALUE	409,905
TOTAL EXEMPTION VALUE	0
BASE TAXABLE VALUE	409,905
TOTAL JUST VALUE	409,905
NCON VALUE	0
INCOME VALUE	
PREVIOUS YEAR MKT VALUE	422,346

PERMIT NUM	DESCRIPTION	AMT	ISSUED
20120665	H/AC	2,500	04/17/2012

SALES DATA

OFF RECORD Number	DATE	TYPE INST	Q U /	V I /	RSN CD	SALE PRICE
2444/1641	1/19/2021	QC	U	I	11	100
GRANTOR: HOWARD CLIFFORD M & M						
GRANTEE: RUBIO PEDRO J & EYA						
2426/1524	1/19/2021	SW	P	I	98	390,000
GRANTOR: M.J. GOODING FAMILY T						
GRANTEE: HOWARD CLIFFORD M &						

BUILDING NOTES

BUILDING DIMENSIONS

PTO=[YR=2000] W20 S10 BAS=[YR=2000] S33 FSP=[YR=2015] S11 E8 FGR=[YR=2000] S19 E12 N20 W7 N2 W5 S3 $ N11 W8 $ E8 S8 E5 S2 E7 N43 W20 $ E20 N10 $ PTR= E15 FUS=[YR=2000] E20 S50 W12 N17 W8 N33 $ W15 $.

EXTRA FEATURES

LN	OB/XF CODE	DESCRIPTION	BLD	CAP	L	W	UNITS	UT	Adj R	ADJ UNIT PRICE	ORIG COND	YEAR ON	YEAR ACTUAL	Q	% COND	OB/XF MKT VALUE	NOTES
1	0811	CONCRETE B	0	0	0	0	561.00	SF	5.20	5.20	100	2000	2000	3	77	2,246	
2	0810	CONCRETE A	0	0	0	0	79.00	SF	6.50	6.50	100	2000	2000	3	77	395	

LAND DESCRIPTION

TOTAL OB/XF 2,641

LN	USE CODE	CLS	LAND USE DESCRIPTION	CAP	RD	LOC ZONE	FRONT	DEPTH	TOT LND UTS	UNIT TYPE	DT	DPTH FACT	% COND	TOT ADJ	UNIT PRICE	ADJ UNIT PRICE	LAND VALUE	OTHER ADJUSTMENTS AND NOTES	YEAR	DENSITY	DECL	FRZ	YR	CONSRV
1	000100	C	RES	0		R-2	30.00	114.00	30.00	FF		1.00	1.00	1.00	6,000.00	6,000.00	180,000							

REVIEW DATE 12/28/2022 BY TWA Total Acres: 0.00 Total Land Value: 180,000 Market: 0 Agricultural: 0 Common: 180,000 PRINTED 07/30/2025 BY SYS