PT LOT 14 IN OR 2419/588
CITRONA S/D U/R

REDMOND WILLIAM L JR
2210 CEDAR ST
FERNANDINA BEACH, FL 32034

2025

00-00-31-1180-0014-0020

NASSAU COUNTY PROPERTY

BUILDING CHARACTERISTICS

ELEMENT	CD	CONSTRUCTION
Exterior Wall	16	WD FR STUC 100
Roof Structur	03	GABLE/HIP 100
Roof Cover	03	COMP SHNGL 100
Interior Wall	05	DRYWALL 100
Interior Floo	14	CARPET 80
Interior Floo	08	SHT VINYL 20
Air Condition	03	CENTRAL 100
Heating Type	04	AIR DUCTED 100
Bedrooms		4 100
Bathrooms		2 100
Frame	02	WOOD FRAME 100
Stories	1.	1. 100
Units		0 100
BUD8 Adjustme	02	DIST FB 100
Occupancy	00	NONE 100
Quality	03	Quality Level 03

DOR CODE	0100	SINGLE FAMILY	
MAP NUM		MKT AREA	01
NEIGHBORHOOD/LOC	1011.00		

AREA TYPE	TOTAL GROSS AREA	PCT OF BASE	YEAR	TOT ADJ AREA	SUBAREA MARKET VALUE
BAS	2,837	100	1993	2,837	170,636
FEP	336	80	1997	269	16,179
FOP	35	30	1993	10	601
UDG	560	55	1997	308	18,525
TOTALS	3,768			3,424	205,941

MARKET ADJUSTMENTS

TYPE	MDL	EFF. AREA	TOT ADJ PTS	EFF. BASE RATE	REPL. COST NEW	AYB	EYB	ECON	FNCT	AP	NORM	% COND
0900	01	3,424	96.6000	127.51	436,594	1985	1985	0	30	33.33	19.50	47.17

1 SNGL FAM – 0% - 0 Heated Area: 2837 HX Base Yr

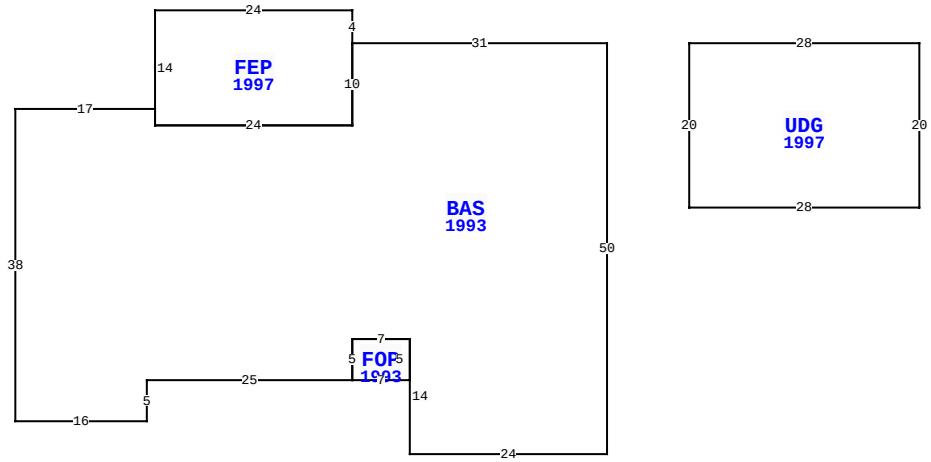

2210 CEDAR ST, FERNANDINA BEACH

BLD DATE		LGL DATE	
XF DATE		LAND DATE	03/18/2024 MLU
INC DATE		AG DATE	

VALUATION SUMMARY

VALUATION BY	STANDARD
Tax Group: 2	Tax Dist:
BUILDING MARKET VALUE	205,941
TOTAL MARKET OB/XF VALUE	5,005
TOTAL LAND VALUE - MARKET	277,200
TOTAL MARKET VALUE	488,146
SOH/AGL Deduction	141,959
ASSESSED VALUE	346,187
TOTAL EXEMPTION VALUE	0
BASE TAXABLE VALUE	346,187
TOTAL JUST VALUE	488,146
NCON VALUE	0
INCOME VALUE	
PREVIOUS YEAR MKT VALUE	404,449

PERMIT NUM	DESCRIPTION	AMT	ISSUED
20120807	STUCCO EXTERIOR	12,000	05/09/2012
20120744	2 WINDOWS/1 DOOR	3,000	04/27/2012
20120550	ELEC OTHER	350	04/03/2012
20120431	18 WINDOWS & 2 DO	12,000	03/15/2012
20091289	REROOF W/30YR SHN	4,000	09/22/2009
972255	ADDITION	10,800	11/13/1997

SALES DATA

OFF RECORD Number	DATE	TYPE INST	Q / U	V / I	RSN CD	SALE PRICE
2419/0588	12/22/2020	WD	Q	I	02	282,000
GRANTOR: ANDERSON HEIDI L PR O						
GRANTEE: REDMOND WILLIAM L J						
1957/0264	12/29/2014	WD	Q	I	01	276,500
GRANTOR: PRIEST JOE F JR & VAL						
GRANTEE: BECK JAMES TOSSEY J						

BUILDING NOTES

EXTRA FEATURES

LN	OB/XF CODE	DESCRIPTION	BLD	CAP	L	W	UNITS	UT	Adj R	ADJ UNIT PRICE	ORIG COND	YEAR ON	YEAR ACTUAL	Q	% COND	OB/XF MKT VALUE	NOTES
1	0810	CONCRETE A	0	0	0	0	325.00	SF	6.50	6.50	100	1985	1985	3	44	930	
2	0810	CONCRETE A	0	0	5	31	155.00	SF	6.50	6.50	100	1985	1985	3	44	443	
3	0500	FP-PRE FAB	0	0	0	0	1.00	UT	3,500.00	3,500.00	100	1996	1996	3	77	2,695	
4	0810	CONCRETE A	0	0	4	16	64.00	SF	6.50	6.50	100	1997	1997	3	72	300	
5	0825	BRICK	0	0	0	0	56.00	SF	12.50	12.50	100	1997	1997	3	91	637	

BUILDING DIMENSIONS

BAS=[YR=1993] W31 FEP=[YR=1997] N4 W24 S14 E24 N10$ S10 W24 N2 W17 S38 E16 N5 E25 FOP=[YR=1993] E7 N5 W7 S5 $ N5 E7 S14 E24 N50$ PTR=E10 UDG=[YR=1997] E28 S20 W28 N20$ W10$.

LAND DESCRIPTION

TOTAL OB/XF 5,005

LN	USE CODE	CLS	LAND USE DESCRIPTION	CAP	RD	LOC ZONE	FRONT	DEPTH	TOT LND UTS	UNIT TYPE	DT	DPTH FACT	% COND	TOT ADJ	UNIT PRICE	ADJ UNIT PRICE	LAND VALUE	OTHER ADJUSTMENTS AND NOTES	YEAR	DENSITY	DECL	FRZ	YR	CONSRV
1	000100	C	RES	0		R-1	126.00	226.00	126.00	FF		1.00	1.00	1.00	2,200.00	2,200.00	277,200							

REVIEW DATE 05/12/2019 BY KBA Total Acres: 0.00 Total Land Value: 277,200 Market: 0 Agricultural: 0 Common: 277,200 PRINTED 07/30/2025 BY SYS