PT OF LOT 13 (EX S-3)
IN OR 2437/1084
EX PT RED BAY FOREST PB 5/138

BIETENHOLZ JOSHUA O & KATHRYN HUNT
2150 DATE ST
FERNANDINA BEACH, FL 32034

2025

00-00-31-1180-0013-0010

BUILDING CHARACTERISTICS

ELEMENT	CD	CONSTRUCTION
Exterior Wall	11	BD/BTN AVG 100
Roof Structur	08	IRREGULAR 100
Roof Cover	03	COMP SHNGL 100
Interior Wall	05	DRYWALL 100
Interior Floo	14	CARPET 80
Interior Floo	18	SLATE 20
Air Condition	03	CENTRAL 100
Heating Type	04	AIR DUCTED 100
Bedrooms		3 100
Bathrooms		3 100
Frame	02	WOOD FRAME 100
Stories	1.5	1.5 100
Units		0 100
Occupancy	00	NONE 100
Quality	04	Quality Level 04

DOR CODE 0100 SINGLE FAMILY
MAP NUM | MKT AREA 01
NEIGHBORHOOD/LOC 1011.00

AREA TYPE	TOTAL GROSS AREA	PCT OF BASE	YEAR	TOT ADJ AREA	SUBAREA MARKET VALUE
BAS	3,018	100	1997	3,018	405,239
FGR	528	55	1997	290	38,940
FOP	69	30	1997	21	2,820
FOP	288	30	1997	86	11,548
FSP	396	40	1997	158	21,215
FST	102	55	1997	56	7,519
FUS	821	100	1997	821	110,239
UOP	141	20	1997	28	3,759
UOP	701	20	2024	140	18,798
TOTALS	6,064			4,618	620,077

MARKET ADJUSTMENTS

TYPE	MDL	EFF. AREA	TOT ADJ PTS	EFF. BASE RATE	REPL. COST NEW	AYB	EYB	ECON	FNCT		NORM	% COND
0500	01	4,618	98.2464	155.23	716,852	1997	1997	0	0	0	13.50	86.50

1 SFR CUST – 100% - 2023 Heated Area: 3839 HX Base Yr 2023

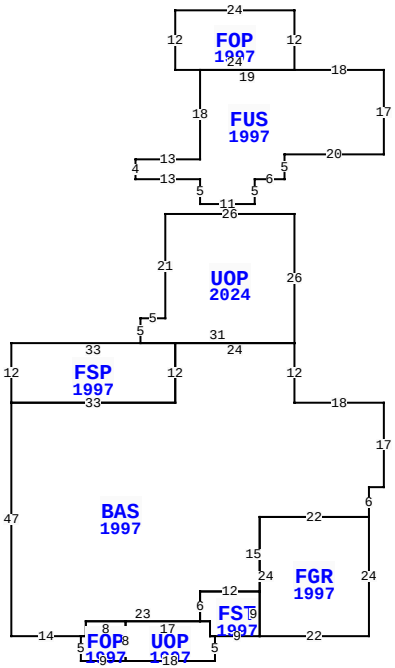

2150 DATE ST, FERNANDINA BEACH

BLD DATE		LGL DATE	
XF DATE		LAND DATE	
INC DATE		AG DATE	

NASSAU COUNTY PROPERTY

PAGE 1 of 1 2

VALUATION SUMMARY

VALUATION BY		STANDARD
Tax Group: 2	Tax Dist:	
BUILDING MARKET VALUE		620,077
TOTAL MARKET OB/XF VALUE		78,601
TOTAL LAND VALUE - MARKET		676,175
TOTAL MARKET VALUE		1,374,853
SOH/AGL Deduction		401,174
ASSESSED VALUE		973,679
TOTAL EXEMPTION VALUE	HX HB	50,722
BASE TAXABLE VALUE		922,957
TOTAL JUST VALUE		1,374,853
NCON VALUE		0
INCOME VALUE		
PREVIOUS YEAR MKT VALUE		1,283,461

PERMIT NUM	DESCRIPTION	AMT	ISSUED
2024-0556	NEW PRIVATE DOCK	100,000	10/18/2024
20222079	SWIM POOL	0	05/02/2022
20090875	H/AC	5,000	07/06/2009
10426	NEW CONSTR	500	04/03/1997
9722	NEW CONSTR	229,000	04/03/1996

SALES DATA

OFF RECORD Number	DATE	TYPE INST	Q U	V I	RSN CD	SALE PRICE
2437/1084	2/26/2021	WD	Q	I	02	1,210,000
GRANTOR: FONTAINE ANN S						
GRANTEE: BIETENHOLZ JOSHUA O						
0572/1234	6/21/1989	WD	Q	V	06	60,000
GRANTOR: BURNS & KAVANAUGH						
GRANTEE: FAONTAINE EUGENE &						

BUILDING NOTES

EXTRA FEATURES

LN	OB/XF CODE	DESCRIPTION	BLD	CAP	L	W	UNITS	UT	Adj R	ADJ UNIT PRICE	ORIG COND	YEAR ON	YEAR ACTUAL	Q	% COND	OB/XF MKT VALUE	NOTES
1	0504	FP-ELECTRI	0	100	0	0	1.00	UT	2,000.00	2,000.00	100	1997	1997	3	79	1,580	
2	0962	SKYLIGHT	0	100	0	0	7.00	UT	250.00	250.00	100	1997	1997	3	72	1,260	
3	0810	CONCRETE A	0	100	0	0	1,600.00	SF	6.50	6.50	100	1998	1998	3	73	7,592	
4	0861	POOL GUNIT	0	100	36	16	576.00	SF	85.00	85.00	100	2024	2023		98	47,981	
5	0855	CONC PAVER	0	100	0	0	796.00	SF	10.00	10.00	100	2024	2023		100	7,960	
6	1242	WD DECK A	0	100	24	10	240.00	SF	10.00	10.00	100	2024	2023		97	2,328	
7	0871	POOL HTR R	0	100	0	0	1.00	UT	2,000.00	2,000.00	100	2024	2023		97	1,940	
8	0855	CONC PAVER	0	100	0	0	796.00	SF	10.00	10.00	100	2024	2023		100	7,960	

BUILDING DIMENSIONS

BAS=[YR=1997;ORIG=0,0] W18 N12 W24 S12 W33 S47 E14 E1 N3 E23 N6 E12 N15 E22 N6 E3 N17 $
FUS=[YR=1997;ORIG=0,-50] N17 W18 W19 S18 W13 S4 E13 S5 E11 N5 E6 N5 E20 $
FGR=[YR=1997;ORIG=-25,47] E22 N24 W22 S24 $
FSP=[YR=1997;ORIG=-42,-12] W33 S12 E33 N12 $
FOP=[YR=1997;ORIG=-18,-67] N12 W24 S12 E24 $
UOP=[YR=1997;ORIG=-52,52] E18 N5 W1 N3 W17 S8 $
FST=[YR=1997;ORIG=-34,47] E9 N9 W12 S6 E2 S3 E1 $
FOP=[YR=1997;ORIG=-61,47] S5 E9 N8 W8 S3 W1 $
PTR=[ORIG=0,0] N50 S50 $
UOP=[YR=2024;ORIG=-18,-38] W26 S21 W5 S5 E31 N26 $

LAND DESCRIPTION

TOTAL OB/XF 78,601

LN	USE CODE	CLS	LAND USE DESCRIPTION	CAP	RD	LOC ZONE	FRONT	DEPTH	TOT LND UTS	UNIT TYPE	DT	DPTH FACT	% COND	TOT ADJ	UNIT PRICE	ADJ UNIT PRICE	LAND VALUE	OTHER ADJUSTMENTS AND NOTES	YEAR	DENSITY	DECL	FRZ	YR	CONSRV
1	000116	C	RES MARSH	100	0005	R-1	0.00	0.00	7.31	AC		1.00	1.00	0.50	185,000.00	92,500.00	676,175							

REVIEW DATE 01/30/2024 BY DJ Total Acres: 7.31 Total Land Value: 676,175 Market: 0 Agricultural: 0 Common: 676,175 PRINTED 07/30/2025 BY SYS