BLOCK 8 N1/2 OF LOT 10
S-1 OF LOT 10
IN OR 2020/122

HALE LARRY & MADELINE
2593 1ST AVE UNIT A
FERNANDINA BEACH, FL 32034

**2025**

**00-00-31-114B-0008-0101**

## BUILDING CHARACTERISTICS

| ELEMENT | CD | CONSTRUCTION |
|---|---|---|
| Exterior Wall | 10 | ABOVE AVG 100 |
| Roof Structur | 03 | GABLE/HIP 100 |
| Roof Cover | 03 | COMP SHNGL 100 |
| Interior Wall | 05 | DRYWALL 100 |
| Interior Floo | 14 | CARPET 60 |
| Interior Floo | 11 | CLAY TILE 40 |
| Air Condition | 03 | CENTRAL 100 |
| Heating Type | 04 | AIR DUCTED 100 |
| Bedrooms | | 3 100 |
| Bathrooms | | 2 100 |
| Frame | 02 | WOOD FRAME 100 |
| Stories | 2. | 2. 100 |
| Units | | 0 100 |
| Quality | 05 | Quality Level 05 |
| DOR CODE | 0100 | SINGLE FAMILY |
| MAP NUM | | MKT AREA 01 |
| NEIGHBORHOOD/LOC | 1043.00 | |

| AREA TYPE | TOTAL GROSS AREA | PCT OF BASE | YEAR | TOT ADJ AREA | SUBAREA MARKET VALUE |
|---|---|---|---|---|---|
| BAL | 266 | 15 | 2019 | 40 | 8,053 |
| BAS | 518 | 100 | 2001 | 518 | 104,283 |
| FGR | 350 | 55 | 2001 | 192 | 38,653 |
| FOP | 84 | 30 | 2001 | 25 | 5,033 |
| FUS | 868 | 100 | 2001 | 868 | 174,744 |
| STP | 12 | 10 | 2019 | 1 | 201 |
| STP | 81 | 10 | 2019 | 8 | 1,611 |
| STR | 70 | 10 | 2019 | 7 | 1,409 |
| UOP | 81 | 20 | 2001 | 16 | 3,221 |
| TOTALS | 2,330 | | | 1,675 | 337,208 |

## MARKET ADJUSTMENTS

| TYPE | MDL | EFF. AREA | TOT ADJ PTS | EFF. BASE RATE | REPL. COST NEW | AYB | EYB | ECON | FNCT | | NORM | % COND |
|---|---|---|---|---|---|---|---|---|---|---|---|---|
| 0320 | 12 | 1,675 | 226.1960 | 226.20 | 378,885 | 2001 | 2001 | 0 | 0 | 0 | 11.00 | 89.00 |

1 TOWNHOUSE - 100% - 2018 Heated Area: 1386 HX Base Yr 2018

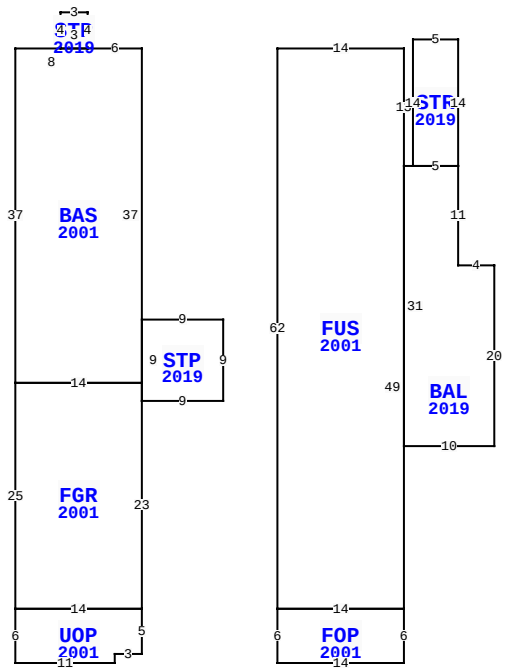


2593 1ST AVE A, FERNANDINA BEACH

| | | | |
|---|---|---|---|
| BLD DATE | | LGL DATE | |
| XF DATE | | LAND DATE | 05/08/2025 MLU |
| INC DATE | | AG DATE | |

## NASSAU COUNTY PROPERTY

PAGE 1 of 1 2

### VALUATION SUMMARY

| | | |
|---|---|---|
| VALUATION BY | | STANDARD |
| Tax Group: 2 | Tax Dist: | |
| BUILDING MARKET VALUE | | 337,208 |
| TOTAL MARKET OB/XF VALUE | | 12,426 |
| TOTAL LAND VALUE - MARKET | | 180,000 |
| TOTAL MARKET VALUE | | 529,634 |
| SOH/AGL Deduction | | 209,669 |
| ASSESSED VALUE | | 319,965 |
| TOTAL EXEMPTION VALUE | HX HB | 50,722 |
| BASE TAXABLE VALUE | | 269,243 |
| TOTAL JUST VALUE | | 529,634 |
| NCON VALUE | | 0 |
| INCOME VALUE | | |
| PREVIOUS YEAR MKT VALUE | | 537,207 |

| PERMIT NUM | DESCRIPTION | AMT | ISSUED |
|---|---|---|---|
| 20190388 | 2ND FLR DECK | 0 | 06/19/2019 |

## SALES DATA

| OFF RECORD Number | DATE | TYPE INST | Q U | V I | RSN CD | SALE PRICE |
|---|---|---|---|---|---|---|
| 2020/0122 | 12/16/2015 | SW | U | I | 12 | 212,500 |
| GRANTOR: FEDERAL NATIONAL MORT | | | | | | |
| GRANTEE: HALE LARRY & MADELI | | | | | | |
| 1977/1566 | 5/04/2015 | CT | U | I | 18 | 100 |
| GRANTOR: CLERK OF COURT | | | | | | |
| GRANTEE: FEDERAL NATIONAL MO | | | | | | |

## BUILDING NOTES

## BUILDING DIMENSIONS

BAS=[YR=2001] W6 STP=[YR=2019] N4 W3 S4 E3$ W8 S37
FGR=[YR=2001] S25 UOP=[YR=2001] S6 E11 N1 E3 N5 W14 $ E14
N23 STP=[YR=2019] E9 N9 W9 S9$ N2 W14 $ E14 N37 $ PTR= E15
FUS=[YR=2001] E14 S13 BAL=[YR=2019] E1 STR=[YR=2019] N14 E5
S14 W5$ E5 S11 E4 S20 W10 N31$ S49 FOP=[YR=2001] S6 W14 N6
E14 $ W14 N62 $ W15 $ .

## EXTRA FEATURES

| LN | OB/XF CODE | DESCRIPTION | BLD | CAP | L | W | UNITS | UT | Adj R | ADJ UNIT PRICE | ORIG COND | YEAR ON | YEAR ACTUAL | Q | % COND | OB/XF MKT VALUE | NOTES |
|---|---|---|---|---|---|---|---|---|---|---|---|---|---|---|---|---|---|
| 1 | 0810 | CONCRETE A | 0 | 100 | 0 | 0 | 460.00 | SF | 6.50 | 6.50 | 100 | 2001 | 2001 | 3 | 79 | 2,362 | |
| 2 | 0810 | CONCRETE A | 0 | 100 | 0 | 0 | 108.00 | SF | 6.50 | 6.50 | 100 | 2001 | 2001 | 3 | 79 | 555 | |
| 3 | 1242 | WD DECK A | 0 | 100 | 0 | 0 | 56.00 | SF | 10.00 | 10.00 | 100 | 2001 | 2001 | 3 | 20 | 112 | |
| 4 | 0855 | CONC PAVER | 0 | 100 | 0 | 0 | 1,384.00 | SF | 7.00 | 7.00 | 100 | 2019 | 2019 | 3 | 97 | 9,397 | |

## LAND DESCRIPTION

TOTAL OB/XF 12,426

| LN | USE CODE | CLS | LAND USE DESCRIPTION | CAP | RD | LOC ZONE | FRONT | DEPTH | TOT LND UTS | UNIT TYPE | DT | DPTH FACT | % COND | TOT ADJ | UNIT PRICE | ADJ UNIT PRICE | LAND VALUE | OTHER ADJUSTMENTS AND NOTES | YEAR | DENSITY | DECL | FRZ | YR | CONSRV |
|---|---|---|---|---|---|---|---|---|---|---|---|---|---|---|---|---|---|---|---|---|---|---|---|---|
| 1 | 000100 | C | RES | 100 | | R-2 | 30.00 | 115.00 | 30.00 | FF | | 1.00 | 1.00 | 1.00 | 6,000.00 | 6,000.00 | 180,000 | | | | | | | |

REVIEW DATE 12/13/2019 BY DJNW Total Acres: 0.00 Total Land Value: 180,000 Market: 0 Agricultural: 0 Common: 180,000 PRINTED 07/30/2025 BY SYS